WILDFLOWER VILLAGE 9 PLAT X-3

LOCATED IN A PORTION OF THE SOUTHEAST QUARTER OF SECTION 8,
TOWNSHIP 5 SOUTH, RANGE 1 WEST, SALT LAKE BASE AND MERIDIAN
CITY OF SARATOGA SPRINGS, UTAH COUNTY, UTAH

Redecoration of the Plat for this project is dependent upon the development having available secondary water right credits.

NORTH

SCALE: 1"=30'

30 15 0 30

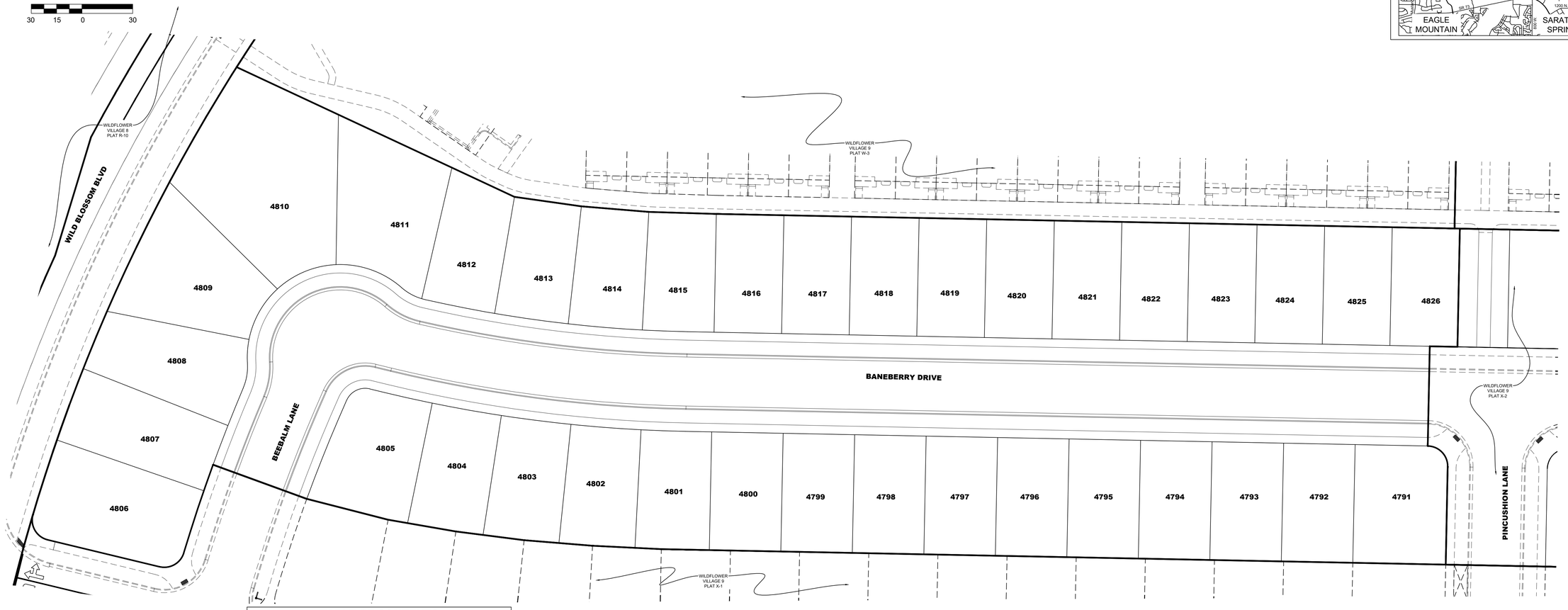

VICINITY MAP

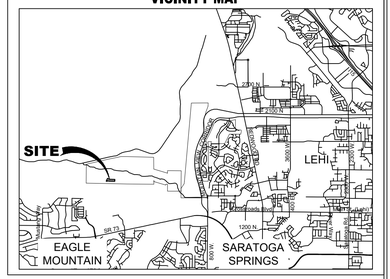

LEI
- A Utah Corporation -
ENGINEERS
SURVEYORS
PLANNERS
3302 N. Main Street
Spanish Fork, UT 84660
Phone: 801.798.0555
Fax: 801.798.9393
office@lei-eng.com
www.lei-eng.com

STATE OF UTAH
GREGORY D MAGLESY
No. 189844
REGISTERED
PROFESSIONAL ENGINEER

TABLE OF CONTENTS

Sheet Number	Sheet Title
COVER	COVER
NOTES	GENERAL NOTES
	PLAT X-3 SHEET 1 OF 2
	PLAT X-3 SHEET 2 OF 2
C-101	EXISTING CONDITIONS & DEMOLITION PLAN
C-102	SITE PLAN
C-201	UTILITY PLAN
C-301	GRADING & DRAINAGE PLAN (OVERALL)
C-401DW	BANEBERRY DRIVE PLAN & PROFILE - DRINKING WATER STA: 9+75-17+00
C-402DW	BEEBALM LANE PLAN & PROFILE - DRINKING WATER STA 11+80-9+50
C-403SW	BANEBERRY DRIVE PLAN & PROFILE - SECONDARY WATER STA: 9+75-17+00
C-404SW	BEEBALM LANE PLAN & PROFILE - SECONDARY WATER STA 11+80-9+50
C-405SS	BANEBERRY DRIVE PLAN & PROFILE - SEWER STA: 9+75-17+00
C-406SS	BEEBALM LANE PLAN & PROFILE - SEWER STA 11+80-9+50
C-407SD	BANEBERRY DRIVE PLAN & PROFILE - STORM DRAIN STA: 9+75-17+00
C-501	SIGNAGE & STRIPING PLAN
C-901	DETAILS
C-902	DETAILS
C-903	DETAILS
C-904	DETAILS
C-905	DETAILS

Standard Drawings Disclaimer

Unofficial copies of the City Standard Drawings (Drawings) have been included in this plan set. Please note that the inclusion of these Drawings is for convenience only and is not a substitute for the official Drawings. In case of any discrepancy, the Drawings on file with the City Recorder shall supersede.

AS NOTED

Acceptance of Plans

The City of Saratoga Springs hereby accepts these plans for construction as being in general compliance with the plans preparation requirements of the City. Responsibility for the completeness and accuracy of these plans and related designs resides with the Project Engineer and Engineering Firm of Record. The City assumes no responsibility or liability whatsoever for the plans or designs submitted.

By Scott Petrik

Name Scott Petrik Engineering Dept.

By David Jellen Date 01/20/2026

Name David Jellen Planning Dept.

Acceptance not valid without Planning and Engineering signatures.

Acceptance expires 12 months after this date if construction has not begun or if Planning approval has expired

CALL BEFORE YOU DIG
IT'S THE LAW
BLUE STAKES 1-800-662-4111

LEGEND

EXISTING	PROPOSED		DETAILS
		BOUNDARY LINE	
		STREET CENTERLINE	
		EASEMENT LINE	
		LOT LINES	
EX SS	SS	SEWER PIPE	SS-1, ST-7, (*2)
		SEWER MANHOLE	SS-2, SS-2A, (*2)
		4" SEWER SERVICE	SS-3, (*5)
EX SD	SD	STORM DRAIN PIPE (RCP)	SD-1, ST-7, (*2)
		STORM DRAIN MANHOLE	SS-2, (*2)
		CURB INLET	SD-2
		COMBO BOX	SD-5
		2'x2' YARD BOX	
		4'x4' CATCH BASIN	(*2)
		3'x3' CATCH BASIN	(*2)
		INLET/OUTLET W/ GRATE	SD-6
EX W	W	CULINARY WATER PIPE	DW-1, DW-2, DW-3, ST-7, (*2)
		45° PIPE ELBOW (W)	DW-2, DW-3, (*2)
		22.5° PIPE ELBOW (W)	DW-2, DW-3, (*2)
		11.25° PIPE ELBOW (W)	DW-2, DW-3, (*2)
		FIRE HYDRANT	DW-4
		3/4" SERVICE & METER (W)	DW-5
		PRV(W)	DW-10A, DW-10B, DW-10C, DW-10D, DW-10E

EXISTING	PROPOSED		DETAILS
		AIR-VAC VALVE (W)	DW-12A, DW-12B, DW-15
		2" BLOW-OFF (W)	DW-13A, DW-15
		VALVE (W & SW)	(*1)(*2)
		TEE	DW-2, (*2)
		CROSS	DW-2, (*2)
EX SW	SW	SECONDARY WATER PIPE	PI-1, PI-2, ST-7, (*2)
		45° PIPE ELBOW (SW)	PI-2, (*2)
		22.5° PIPE ELBOW (SW)	PI-2, (*2)
		11.25° PIPE ELBOW (SW)	PI-2, (*2)
		1" SINGLE SW SERVICE	PI-3, PI-5A, PI-5C
		1-1/2" DUAL SW SERVICE	PI-3, PI-5B, PI-5C
		SW SERVICE TO PARKS	PI-4
		AIR-VAC VALVE (SW)	PI-8A, PI-8B, PI-13
		BACKFLOW PREVENTER	PI-11
		2" BLOW-OFF (SW)	PI-12A, PI-13
		30" C&G (COLLECTOR)	ST-1, ST-2A
		24" C&G (LOCAL)	ST-1, ST-2B
		24" SHED C&G	ST-1, ST-2D
		SIDEWALK	ST-1
	STOP	STOP SIGN	ST-28
		STREET SIGN	ST-28
		MONUMENT	ST-29
		SPRINKLER CONDUIT	ST-8, (*3)

EXISTING	PROPOSED		DETAILS
		FENCE	LS-14, LS15,
		STREET LIGHT LOCAL	LP-1A, LP-1B, LP-4, LP-6
		STREET LIGHT COLLECTOR	LP-2A, LP-2B, LP-2C, LP-5, LP-6
		POWER POLE	
		DITCH	
EX FO		FIBER OPTIC	
EX GAS		GAS	
EX OHP	OHP	OVERHEAD POWER	
		FLOW ARROW	
		CONTOURS	
		100 YEAR FLOOD ROUTE	
		MATCH LINE	
		DRIVE APPROACH	ST-4A, ST-4B
		ADA RAMP	ST-5A, ST-5B, ST-5C, ST-5D, ST-5E
		TRAIL	ST-15, (*4)

(*1)CULINARY & SECONDARY WATER LINES LESS THAN 12" TO BE GATE VALVES, LINES 12" & LARGER REQUIRE BUTTERFLY VALVES
(*2)SEE PLAN & PROFILE FOR SIZE & MATERIAL
(*3)SEE LANDSCAPE DESIGN FOR NUMBER OF CONDUITS & SIZES
(*4)SEE PLAN & PROFILE FOR WIDTH & DESIGN MATERIALS
(*5) SEWER SERVICE MINIMUM SLOPE 2%

OWNER / DEVELOPER

LENNAR
111 EAST SEGO LILY DR, SUITE 150
SANDY, UT 84070
(801) 508-5634

CITY OF SARATOGA SPRINGS
1307 N. COMMERCE DR. #200
SARATOGA SPRINGS, UTAH 84045

PLANNING DEPT: 801-766-9793
ENGINEERING DEPT: 801-766-6506

ROCKY MOUNTAIN POWER
PHONE: 800-469-3981

ENBRIDGE GAS UTAH
PHONE: 800-366-8532

ENGINEER

LEI CONSULTING ENGINEERS
AND SURVEYORS
3302 NORTH MAIN
SPANISH FORK, UTAH 84660
801-798-0555

WILDFLOWER - VILLAGE 9 - PLAT X-3
CITY OF SARATOGA SPRINGS, UTAH COUNTY, UTAH
COVER

REVISIONS
1 -
2 -
3 -
4 -
5 -

LEI PROJECT #: 2023-0055
DRAWN BY: BLS/MJV
CHECKED BY: GDM
SCALE: 1"=30' (PRINTED ON 24x36)
DATE: 12/23/2025
SHEET: COVER

U:\LAND DESKTOP PROJECTS\13-0002 DAI COLLINS BROTHERS\DWG\VILLAGE 9\V9 PLAT X-3\13-0055 X-3 (000-102) SHEETS.DWG 12/5/2025 3:41 PM

GENERAL NOTES

1. ALL IMPROVEMENTS SHALL BE CONSTRUCTED AND INSPECTED IN STRICT ACCORDANCE WITH ALL JURISDICTIONAL AUTHORITIES.
2. CONTRACTOR SHALL COMPLY WITH THE STANDARDS INDICATED WITHIN THE CONSTRUCTION DOCUMENTS. THE CONTRACTOR SHALL NOTIFY ALL AGENCIES, OWNERS, ENGINEERS, AND UTILITY COMPANIES FIVE DAYS PRIOR TO A PRE-CONSTRUCTION MEETING.
3. IT IS INTENDED THAT THESE PLANS AND SPECIFICATIONS REQUIRE ALL LABOR AND MATERIALS NECESSARY AND PROPER FOR THE WORK CONTEMPLATED AND THAT THE WORK BE COMPLETED IN ACCORDANCE WITH THEIR TRUE INTENT AND PURPOSE. THE CONTRACTOR SHALL NOTIFY THE ENGINEER IMMEDIATELY REGARDING ANY DISCREPANCIES OR AMBIGUITIES WHICH MAY EXIST IN THE PLANS OR SPECIFICATIONS. THE ENGINEER'S INTERPRETATION THEREOF SHALL BE CONCLUSIVE.
4. WHERE THE PLANS OR SPECIFICATIONS DESCRIBE PORTIONS OF THE WORK IN GENERAL TERMS BUT NOT IN COMPLETE DETAIL, IT IS UNDERSTOOD THAT ONLY THE BEST GENERAL PRACTICE IS TO PREVAIL AND THAT ONLY MATERIALS AND WORKMANSHIP OF THE FIRST QUALITY ARE TO BE USED.
5. CONTRACTOR SHALL INSPECT THE SITE OF THE WORK PRIOR TO BIDDING TO SATISFY THEMSELVES BY PERSONAL EXAMINATION OR BY SUCH OTHER MEANS AS THEY MAY PREFER, OF THE LOCATION OF THE PROPOSED WORK, AND OF THE ACTUAL CONDITIONS OF, AND AT, THE SITE OF WORK. IF, DURING THE COURSE OF THEIR EXAMINATION, A BIDDER FINDS FACTS OR CONDITIONS WHICH APPEAR TO THEM TO BE IN CONFLICT WITH THE LETTER OR SPIRIT OF THE PROJECT PLANS AND SPECIFICATIONS, THEY SHALL CONTACT THE ENGINEER FOR ADDITIONAL INFORMATION AND EXPLANATION BEFORE SUBMITTING THEIR BID. SUBMISSION OF A BID BY THE CONTRACTOR SHALL CONSTITUTE ACKNOWLEDGMENT THAT, IF AWARDED THE CONTRACT, (1) THEY HAVE RELIED AND ARE RELYING ON THEIR OWN EXAMINATION OF THE SITE OF THE WORK, (2) ACCESS TO THE SITE, AND (3) ALL OTHER DATA AND MATTERS REQUISITE TO THE FULFILLMENT OF THE WORK AND ON THEIR OWN KNOWLEDGE OF EXISTING FACILITIES ON AND IN THE VICINITY OF THE SITE OF THE WORK TO BE CONSTRUCTED UNDER THIS CONTRACT. THE INFORMATION PROVIDED BY THE OWNER OR THE ENGINEER IS NOT INTENDED TO BE A SUBSTITUTE FOR, OR A SUPPLEMENT TO THE INDEPENDENT VERIFICATION BY THE CONTRACTOR TO THE EXTENT SUCH INDEPENDENT INVESTIGATION OF SITE CONDITIONS IS DEEMED NECESSARY OR DESIRABLE BY THE CONTRACTOR. CONTRACTOR SHALL ACKNOWLEDGE THAT THEY HAVE NOT RELIED SOLELY UPON OWNER OR ENGINEER FURNISHED INFORMATION REGARDING SITE CONDITIONS IN PREPARING AND SUBMITTING THEIR BID.
6. NO ALLOWANCE WILL BE MADE FOR DISCREPANCIES OR OMISSIONS THAT CAN BE EASILY OBSERVED. VERIFY ALL EXISTING CONDITIONS BEFORE BIDDING AND ANSWER ANY QUESTIONS BEFORE CONSTRUCTION.
7. ALL TRAFFIC CONTROL IS TO CONFORM TO THE CURRENT MUTCD AND UDOT STANDARDS. FOR ALL WORK WITHIN PUBLIC RIGHTS-OF-WAYS OR EASEMENTS, THE CONTRACTOR SHALL PRESERVE THE INTEGRITY AND LOCATION OF ANY AND ALL PUBLIC UTILITIES AND PROVIDE THE NECESSARY CONSTRUCTION TRAFFIC CONTROL. CONTRACTOR SHALL, THROUGH THE ENCROACHMENT PERMIT PROCESS, VERIFY WITH THE NECESSARY REGULATORY AGENCIES, THE NEED FOR ANY TRAFFIC ROUTING PLAN. IF PLAN IS REQUIRED, CONTRACTOR SHALL PROVIDE PLAN AND RECEIVE PROPER APPROVALS PRIOR TO BEGINNING CONSTRUCTION. THE CONTRACTOR SHALL PROVIDE ALL LIGHTS, BARRICADES, SIGNS, FLAGMEN OR OTHER DEVICES NECESSARY FOR PUBLIC SAFETY.
8. THE CONTRACTOR SHALL BE HELD RESPONSIBLE FOR ANY FIELD CHANGES MADE WITHOUT PRIOR WRITTEN AUTHORIZATION FROM THE OWNER AND/OR ENGINEER.
9. CONTRACTOR TO VERIFY EXISTING CONDITIONS, TIE IN POINTS, UTILITY CONNECTIONS, ETC. PRIOR TO CONSTRUCTION AND NOTIFY ENGINEER OF ANY DISCREPANCIES.
10. THE CONTRACTOR SHALL EXERCISE DUE CAUTION AND SHALL CAREFULLY PRESERVE BENCHMARKS, CONTROL POINTS, SECTION CORNERS, REFERENCE POINTS AND ALL SURVEY STAKES, AND SHALL BEAR ALL EXPENSES FOR REPLACEMENT AND/OR ERRORS CAUSED BY UNNECESSARY LOSS OR DISTURBANCE.
11. CONTRACTOR TO FURNISH, MAINTAIN, AND RESTORE ALL SURVEY MONUMENTS AND MONUMENT REFERENCE MARKERS WITHIN THE PROJECT SITE. CONTRACTOR TO CONTACT THE CITY OR COUNTY SURVEYOR FOR MONUMENT PERMITTING, LOCATIONS AND CONSTRUCTION DETAILS.
12. ALL EXISTING ASPHALT WILL BE SAW CUT IN NEAT STRAIGHT LINES BY THE CONTRACTOR PRIOR TO EXCAVATION.

GENERAL CLEARING AND GRADING NOTES

1. CLEARING, GRUBBING AND DISPOSAL OF VEGETATIVE MATERIAL NEEDS TO BE IN ACCORDANCE WITH STATE AND COUNTY REGULATIONS, WHICH APPLY TO SOLID WASTE.
2. THE EXISTING TOPOGRAPHY SHOWN ON THESE PLANS IS BASED ON DRAWINGS AND A TOPOGRAPHIC SURVEY PERFORMED BY LEI ENGINEERS (UNLESS OTHERWISE NOTED). IF THE EXISTING GRADE IS DIFFERENT FROM WHAT IS SHOWN ON THE GRADING PLAN, CONTRACTOR TO NOTIFY ENGINEER IMMEDIATELY.
3. ALL EARTH WORK SHALL BE PERFORMED IN ACCORDANCE WITH THE GEOTECHNICAL ENGINEER'S REPORT.
4. WHEN USING ELECTRONIC FILES OF MASS GRADING SITES PREPARED BY LEI THE CONTRACTOR MUST USE THE DIGITAL TERRAIN MODEL CREATED BY AUTODESK CIVIL 3D AND NOT A REPRODUCTION OF PROPOSED CONTOURS. LEI IS NOT RESPONSIBLE FOR ANY INACCURACIES, ERRORS AND/OR DISCREPANCIES DUE TO CONVERSION OR USE OF ELECTRONIC FILES.
5. NO CHANGE IN DESIGN LOCATION OR GRADE WILL BE MADE BY THE CONTRACTOR WITHOUT THE WRITTEN APPROVAL OF THE PROJECT ENGINEER.
6. EROSION CONTROL - A STORMWATER POLLUTION PREVENTION PLAN (SWPPP) IS REQUIRED IN ACCORDANCE WITH THE UTAH POLLUTANT DISCHARGE ELIMINATION SYSTEM (UPDES) PERMIT FOR CONSTRUCTION. OUTLINING HOW EROSION AND SILTATION WILL BE CONTROLLED. CONTRACTOR IS RESPONSIBLE FOR OBTAINING AND MAINTAINING THE APPROPRIATE PERMITS AND INSPECTIONS. A COPY OF THE PLAN MUST BE ON SITE AT ALL TIMES. THE CONTRACTOR SHALL BE RESPONSIBLE FOR IMPLEMENTING THE PLAN AND INSTALLING AND MAINTAINING THE EROSION CONTROL FACILITIES WITH EACH PHASE OF WORK. SHOULD SILT LEAVE THE SITE OR EROSION OCCURS, IT WILL BE THE CONTRACTORS RESPONSIBILITY TO TAKE CORRECTIVE ACTION AND REPAIR ANY DAMAGE CAUSED BY THE SILT OR EROSION IMMEDIATELY. ALL COSTS ASSOCIATED WITH THE MODIFICATION AND APPROVAL OF THE PLAN WILL BE THE RESPONSIBILITY OF THE CONTRACTOR.

GENERAL UTILITY NOTES

1. CONTRACTOR SHALL BE RESPONSIBLE FOR CALLING BLUE STAKES FOR MARKINGS TO VERIFY ALL EXISTING UTILITIES. CONTRACTOR SHALL BE RESPONSIBLE FOR DAMAGES TO EXISTING UTILITIES AND FOR ALL INTERRUPTIONS CAUSED BY THE RESULTS OF HIS WORK.
2. THE LOCATIONS OF UNDERGROUND FACILITIES SHOWN ON THESE PLANS ARE BASED ON FIELD SURVEYS AND LOCAL UTILITY COMPANY RECORDS. IT SHALL BE THE CONTRACTORS FULL RESPONSIBILITY TO CONTACT THE VARIOUS UTILITY COMPANIES TO LOCATE THEIR FACILITIES PRIOR TO PROCEEDING WITH CONSTRUCTION. NO ADDITIONAL COMPENSATION SHALL BE PAID TO THE CONTRACTOR FOR DAMAGE AND REPAIR TO THESE FACILITIES CAUSED BY CONTRACTORS WORK FORCE.
3. START AT THE LOW END OF ALL GRAVITY FEED LINES AND WORK UPHILL. DO NOT DRY START GRAVITY FEED LINES THAT TIE INTO EXISTING GRAVITY LINES. FAILURE TO COMPLY WITH THIS NOTE SHALL RELEASE THE CIVIL ENGINEER OF ALL LIABILITY.
4. CONTRACTOR SHALL LAYOUT AND POTHOLE FOR ALL POTENTIAL CONFLICTS WITH UTILITY LINES ON OR OFF-SITE AS REQUIRED PRIOR TO ANY CONSTRUCTION.
5. ANY POWER, NATURAL GAS, AND COMMUNICATIONS UTILITIES SHOWN ON THE PLANS ARE FOR REFERENCE PURPOSES ONLY AND ARE NOT DESIGN DRAWINGS FOR THE RELOCATION OR REMOVAL OF EXISTING UTILITIES, NOR FOR ANY NEW UTILITY SERVICES. CONTRACTOR TO SUBMIT SITE PLAN TO APPROPRIATE UTILITY PROVIDER FOR DESIGN OF SERVICE CONNECTIONS.
6. ALL DIMENSIONS, GRADES AND UTILITY DESIGNS SHOWN ON THE PLANS SHALL BE VERIFIED BY THE CONTRACTOR PRIOR TO CONSTRUCTION. NOTIFY THE ENGINEER IF ANY DISCREPANCIES EXISTS PRIOR TO CONSTRUCTION FOR NECESSARY PLAN OR GRADE CHANGES.
7. ALL EXISTING MANHOLES, WATER VALVES, CLEAN OUTS, ETC., ARE TO BE RAISED OR LOWERED TO GRADE.
8. THE DRY START OF ANY UTILITY WITHOUT DIRECT CONNECTION TO EXISTING UTILITY INFRASTRUCTURE IS HIGHLY DISCOURAGED UNLESS DIRECTED OTHERWISE BY THE OWNER/DEVELOPER. LEI IS NOT RESPONSIBLE FOR ANY ISSUES OR CHANGES RESULTING FROM SUCH CONSTRUCTION METHODS.
9. NO CHANGE IN DESIGN LOCATION OR GRADE WILL BE MADE BY THE CONTRACTOR WITHOUT THE WRITTEN APPROVAL OF THE PROJECT ENGINEER.
10. AND AT THE SOLE RISK OF THE CONTRACTOR UNLESS DIRECTED OTHERWISE BY THE OWNER/DEVELOPER.
11. CONTRACTOR IS RESPONSIBLE TO REMOVE, SALVAGE, AND REPLACE FENCE LINES WHICH ARE DISTURBED DURING CONSTRUCTION.
12. SANITARY SEWER TO BE INSTALLED A MINIMUM OF 10 FEET HORIZONTALLY AND 18 INCHES VERTICALLY FROM ALL WATER LINES.
13. ALL PIPE LENGTHS SHOWN ON PLANS ARE FROM CENTER OF STRUCTURE TO CENTER OF STRUCTURE UNLESS NOTED OTHERWISE.
14. UTILITY LATERAL TO BE INSTALLED PER CITY STANDARD LOCATION UNLESS OTHERWISE NOTED.

ELECTRONIC FILE NOTES

1. THE HARD COPIES OF THIS INFORMATION WILL GOVERN OVER THE ELECTRONIC DATA IN THE EVENT ANY DISCREPANCIES ARE FOUND WITH THE INFORMATION. PLEASE CONTACT LEI BEFORE CONSTRUCTION IF ANY DISCREPANCIES ARE FOUND.
2. THE INFORMATION RECORDED ON OR TRANSMITTED AS ELECTRONIC MEDIA WAS CREATED USING AUTODESK CIVIL 3D 2020 SOFTWARE. THEREFORE, THE INFORMATION IS SUBJECT TO UNDETECTABLE ALTERATION, EITHER INTENTIONAL OR UNINTENTIONAL DUE TO, AMONG OTHER CAUSES, TRANSMISSION, CONVERSION, MEDIA DEGRADATION, SOFTWARE ERROR, OR HUMAN ALTERATION.

CITY STANDARD NOTES

1. CONTRACTOR SHALL FIELD VERIFY LOCATIONS AND INVERT ELEVATIONS OF EXISTING MANHOLES AND OTHER UTILITIES BEFORE STAKING OR CONSTRUCTING ANY NEW SEWER LINES.
2. CONTRACTOR SHALL FIELD VERIFY LOCATIONS AND INVERT ELEVATIONS OF EXISTING STORM DRAIN STRUCTURES AND OTHER UTILITIES BEFORE STAKING OR CONSTRUCTING ANY NEW STORM DRAIN LINES.
3. ALL CONSTRUCTION SHALL COMPLY WITH THE STANDARD TECHNICAL SPECIFICATIONS AND DRAWINGS FOR THE CITY OF SARATOGA SPRINGS, UTAH.
4. EXISTING UTILITIES HAVE BEEN NOTED TO THE BEST OF ENGINEERS KNOWLEDGE, HOWEVER IT IS OWNERS AND CONTRACTORS RESPONSIBILITY TO LOCATE UTILITIES IN FIELD AND NOTIFY CITY ENGINEER AND CITY IF DISCREPANCIES EXIST PRIOR TO CONTINUING ANY CONSTRUCTION.
5. POST-ACCEPTANCE ALTERATIONS TO LIGHTING PLANS OR INTENDED SUBSTITUTIONS FOR ACCEPTED LIGHTING EQUIPMENT SHALL BE SUBMITTED TO THE CITY FOR REVIEW AND ACCEPTANCE.
6. THE CITY RESERVES THE RIGHT TO CONDUCT POST-INSTALLATION INSPECTIONS TO VERIFY COMPLIANCE WITH THE CITY'S REQUIREMENTS AND ACCEPTED LIGHTING PLAN COMMITMENTS, AND IF DEEMED APPROPRIATE BY THE CITY, TO REQUIRE REMEDIAL ACTION AT NO EXPENSE TO THE CITY.
7. ALL EXTERIOR LIGHTING SHALL MEET IESNA FULL-CUTOFF CRITERIA.
8. CONTRACTOR TO VERIFY ALL EXISTING CONDITIONS AND LOCATION OF EXISTING UTILITIES PRIOR TO CONSTRUCTION.
9. ALL INTERSECTIONS TO HAVE ADA HANDICAP RAMPS ACCORDING TO CITY STANDARDS WITH A MAXIMUM OF 2% SLOPE IN FRONT OF ADA RAMP.
10. ALL EXISTING FENCING WITHIN THE PROPOSED BOUNDARY TO BE REMOVED.
11. DRAINAGE ACROSS PROPERTY LINES SHALL NOT EXCEED THAT WHICH EXISTED PRIOR TO GRADING. EXCESS OR CONCENTRATED DRAINAGE SHALL BE CONTAINED ON SITE OR DIRECTED TO AN APPROVED DRAINAGE FACILITY AS PER IBC 2015 J109.4
12. ALL DRINKING WATER & SECONDARY WATER PIPES 24" OR LARGER TO BE DUCTILE IRON CLASS 53. PIPES SMALLER THAN 24" TO BE DR-18 PVC.
13. ALL SEWER LINES TO BE SDR-35
14. ALL STORM DRAIN LINES TO BE RCP.
15. TEMPORARY TURN AROUND TO BE INSTALLED AS REQUIRED WITH FINAL CONSTRUCTION PHASING AT ALL STREET ENDS LONGER THAN 150' AS REQUIRED BY CITY STANDARDS.
16. DRINKING WATER & SECONDARY WATERLINES TO DEFLECT AS NECESSARY AS SHOWN AND AS PER MANUFACTURER SPECIFICATIONS UNLESS OTHERWISE NOTED.

NOTES

1. CONTRACTOR TO VERIFY ALL EXISTING CONDITIONS AND LOCATION OF EXISTING UTILITIES PRIOR TO CONSTRUCTION.
2. ALL INTERSECTIONS TO HAVE ADA HANDICAP RAMPS ACCORDING TO CITY STANDARDS.
3. ALL PRIVATE UTILITIES TO BE LOCATED IN PUBLIC UTILITY EASEMENTS.
4. DRAINAGE ACROSS PROPERTY LINES SHALL NOT NOT EXCEED THAT WHICH EXISTED PRIOR TO GRADING. EXCESS OR CONCENTRATED DRAINAGE SHALL BE CONTAINED ON SITE OR DIRECTED TO AN APPROVED DRAINAGE FACILITY. LOTS SHALL BE GRADED TO DRAIN SURFACE WATER AWAY FROM FOUNDATION WALLS. THE GRADING SHALL FALL A MINIMUM OF 6 INCHES WITHIN THE FIRST 10 FEET.
5. AREA SHOWN HEREON FALLS WITHIN FLOOD ZONE "X" (AREA DETERMINED TO BE OUTSIDE OF 500 YEAR FLOOD PLAIN) AS PER FIRM MAP NO. 49049C0150F WITH EFFECTIVE DATE OF JUNE 19, 2020.
6. ALL DRINKING WATER & SECONDARY WATER PIPES TO BE DR-18 PVC.
7. ALL RESIDENTIAL DRINKING WATER METERS TO BE 3/4" DIAMETER. INSTALL POLY PAST THE METERS TO THE LOT SIDE OF THE SIDEWALK ON CULINARY LATERALS, SEE CITY DETAIL CW-5.
8. ALL RESIDENTIAL SECONDARY WATER METERS TO BE 1", LATERALS TO SINGLE SERVICE TO BE 1", LATERALS TO DUAL SERVICE TO BE 1-1/2". SEE CITY DETAIL PI-3.
9. ALL CULINARY OR SECONDARY WATER VALVES 12" OR LARGER TO BE BUTTERFLY VALVES, ALL VALVES SMALLER TO BE GATE VALVES.
10. MARKERS MUST BE PLACED AT ALL "OFFSITE" UTILITIES PER CITY STANDARD ST-27.
11. SEE GRADING AND DRAINAGE PLAN FOR GRADING REQUIREMENTS.
12. SEE SIGNAGE & STRIPING PLAN FOR SIGN LOCATIONS.
13. RESIDENTIAL STREETS 59 FOOT RIGHT-OF-WAY TO BE INSTALLED PER CITY DETAIL ST-8 (2021). RESIDENTIAL STREETS TO UTILIZE STREET PAVEMENT SECTION DETAIL 1 SHEET C-901.
14. ALL TEMPORARY TURN AROUND TO BE INSTALLED PER CITY STANDARD DETAIL ST-14.
15. ALL FENCING ONSITE TO BE REMOVED UNLESS OTHERWISE NOTED. SEE EXISTING CONDITIONS PLAN
16. ALL TREES TO BE REMOVED FROM SITE UNLESS OTHERWISE NOTES. SEE EXISTING CONDITIONS PLAN.
17. SHALLOW SEWER DEPTHS! CONTRACTOR SHALL VERIFY SEWER DEPTHS BEFORE EXCAVATING FOR BASEMENT. HOME(S) WITH BASEMENT MAY NOT HAVE SEWER SERVICE AVAILABLE FOR BASEMENT.

DATA TABLE

PLAT X-3

SINGLE FAMILY LOTS ..... 36 LOTS
DWELLINGS ..... 36 DWELLINGS
PARCELS ..... 0 PARCELS
DENSITY ..... 9.42 UNITS/ ACRE
MINIMUM LOT SIZE..... 0.06 ACRES / 2,800 SF
MAXIMUM LOT SIZE..... 0.18 ACRES / 8,350 SF
AVERAGE LOT SIZE..... 0.08 ACRES / 3,359 SF

	ACRES	SQ. FT.	PERCENT
TOTAL PROJECT AREA	3.82	166,359	100%
LOT AREA	2.78	120,912	72.7%
OPEN SPACE	0.00	0	0%
LANDSCAPED COMMON SPACE	0.00	0	0%
LIMITED COMMON SPACE	0.00	0	0.0%
PRIVATE RIGHT-OF-WAY AREA	0.00	0	0%
PUBLIC RIGHT-OF-WAY AREA	1.04	45,447	27.3%
LANDSCAPE AREA (PUBLIC ROW)	0.28	12,101	7.3%
HARDSCAPE AREA (PUBLIC ROW)	0.76	33,346	19.9%
BUILDABLE LAND	3.82	166,359	100%
SENSITIVE LANDS	0.00	0	0%
NON-SENSITIVE LANDS	3.82	166,359	100%

NUMBER OF GARAGE PARKING SPACES	72
NUMBER OF DRIVEWAY PARKING SPACES	72
NUMBER OF STRIPED PARKING SPACES	0
NUMBER OF GUEST PARKING SPACES PROVIDED	0

ABBREVIATIONS

NG	NATURAL GROUND
FG	FINISH GRADE
FS	FINISH SURFACE
EG	EXISTING GRADE
EX	EXISTING
TOW	TOP OF WALL
BOW	BOTTOM OF WALL
FF	FINISH FLOOR
GFF	GARAGE FINISH FLOOR
FH	FIRE HYDRANT
PI	PRESSURIZED IRRIGATION
CB	CATCH BASIN
SMH	SEWER MANHOLE
SDMH	STORM DRAIN MANHOLE

- A Utah Corporation -
ENGINEERS
SURVEYORS
PLANNERS
3302 N. Main Street
Spanish Fork, UT 84660
Phone: 801.798.0555
Fax: 801.798.9393
office@lei-eng.com
www.lei-eng.com

STATE OF UTAH
GREGORY D. MAGLEBY
No. 189844
12/23/2025
REGISTERED
PROFESSIONAL ENGINEER

WILDFLOWER - VILLAGE 9 - PLAT X-3

CITY OF SARATOGA SPRINGS, UTAH COUNTY, UTAH

GENERAL NOTES

REVISIONS
1 -
2 -
3 -
4 -
5 -

LEI PROJECT #: 2023-0055
DRAWN BY: BLS/MJV
CHECKED BY: GDM
SCALE: NONE (PRINTED ON 24x36)
DATE: 12/23/2025
SHEET: NOTES

U:\LAND DESKTOP PROJECTS\13-0902 D4 COLLINS BROTHERS\DWG\VILLAGE 9\V9 PLAT X-3\23-0055 X-3 (000-102) SHEETS.DWG 12/5/2025 5:41 PM

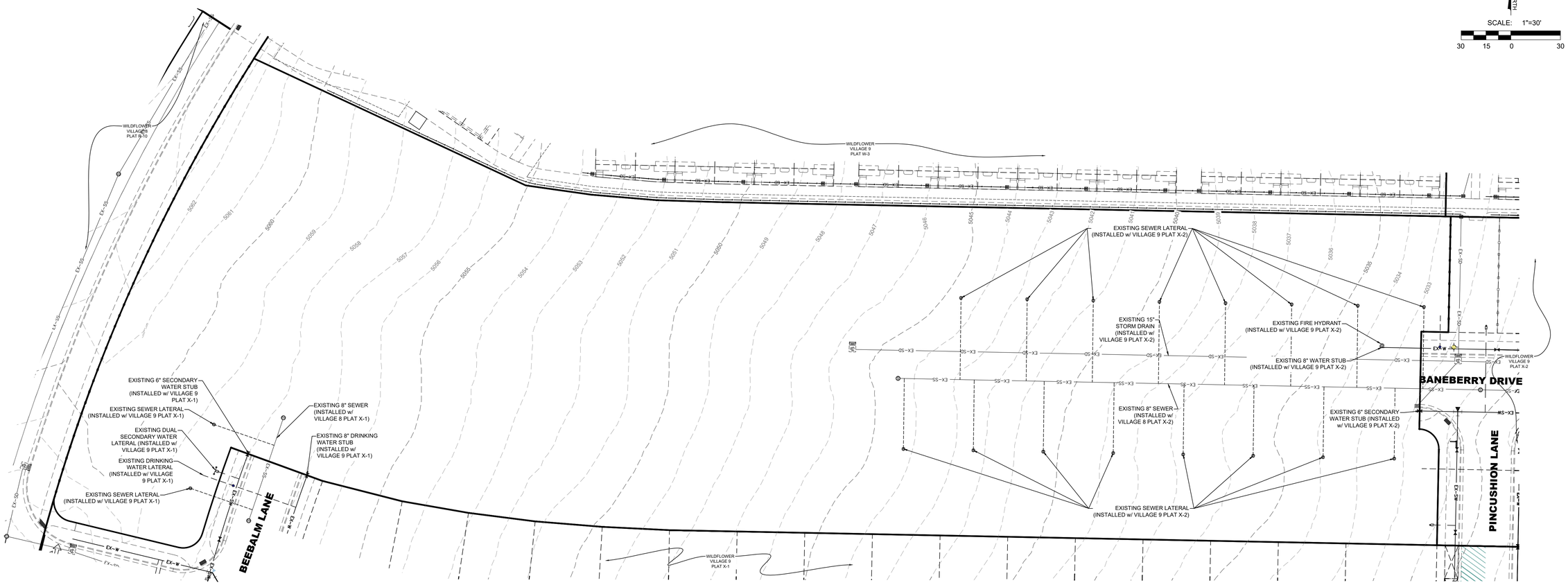

NOTE:
A RIGHT-OF-WAY ENCROACHMENT PERMIT MUST BE OBTAINED FROM THE CITY OF SARATOGA SPRINGS PRIOR TO DOING ANY WORK IN THE EXISTING RIGHT-OF-WAY. APPLY FOR ENCROACHMENT PERMIT AT:
https://cityworks.saratogaspringscity.com/publicaccess/template/login.aspx

CALL BEFORE YOU DIG
BLUE STAKES 1-800-662-4111

LEGEND

EXISTING	PROPOSED		DETAILS
		BOUNDARY LINE	
		STREET CENTERLINE	
		EASEMENT LINE	
		LOT LINES	
EX SS	SS	SEWER PIPE	SS-1, ST-7, (*2)
		SEWER MANHOLE	SS-2, SS-2A, (*2)
		4" SEWER SERVICE	SS-3, (*5)
EX SD	SD	STORM DRAIN PIPE (RCP)	SD-1, ST-7, (*2)
		STORM DRAIN MANHOLE	SS-2, (*2)
		CURB INLET	SD-2
		COMBO BOX	SD-5
		2'x2' YARD BOX	
		4'x4' CATCH BASIN	(*2)
		3'x3' CATCH BASIN	(*2)
		INLET/OUTLET W/ GRATE	SD-6
EX W	W	CULINARY WATER PIPE	DW-1, DW-2, DW-3, ST-7, (*2)
		45° PIPE ELBOW (W)	DW-2, DW-3, (*2)
		22.5° PIPE ELBOW (W)	DW-2, DW-3, (*2)
		11.25° PIPE ELBOW (W)	DW-2, DW-3, (*2)
		FIRE HYDRANT	DW-4
		3/4" SERVICE & METER (W)	DW-5
		PRV(W)	DW-10A, DW-10B, DW-10C, DW-10D, DW-10E

EXISTING	PROPOSED		DETAILS
		AIR-VAC VALVE (W)	DW-12A, DW-12B, DW-15
		2" BLOW-OFF (W)	DW-13A, DW-15
		VALVE (W & SW)	(*1)(*2)
		TEE	DW-2, (*2)
		CROSS	DW-2, (*2)
EX SW	SW	SECONDARY WATER PIPE	PI-1, PI-2, ST-7, (*2)
		45° PIPE ELBOW (SW)	PI-2, (*2)
		22.5° PIPE ELBOW (SW)	PI-2, (*2)
		11.25° PIPE ELBOW (SW)	PI-2, (*2)
		1" SINGLE SW SERVICE	PI-3, PI-5A, PI-5C
		1-1/2" DUAL SW SERVICE	PI-3, PI-5B, PI-5C
		SW SERVICE TO PARKS	PI-4
		AIR-VAC VALVE (SW)	PI-8A, PI-8B, PI-13
		BACKFLOW PREVENTER	PI-11
		2" BLOW-OFF (SW)	PI-12A, PI-13
		30" C&G (COLLECTOR)	ST-1, ST-2A
		24" C&G (LOCAL)	ST-1, ST-2B
		24" SHED C&G	ST-1, ST-2D
		SIDEWALK	ST-1
STOP		STOP SIGN	ST-28
		STREET SIGN	ST-28
		MONUMENT	ST-29
		SPRINKLER CONDUIT	ST-8, (*3)

EXISTING	PROPOSED		DETAILS
		FENCE	LS-14, LS15,
		STREET LIGHT LOCAL	LP-1A, LP-1B, LP-4, LP-6
		STREET LIGHT COLLECTOR	LP-2A, LP-2B, LP-2C, LP-5, LP-6
		POWER POLE	
		DITCH	
EX FO		FIBER OPTIC	
EX GAS		GAS	
EX OHP	OHP	OVERHEAD POWER	
		FLOW ARROW	
		CONTOURS	
		100 YEAR FLOOD ROUTE	
		MATCH LINE	
		DRIVE APPROACH	ST-4A, ST-4B
		ADA RAMP	ST-5A, ST-5B, ST-5C, ST-5D, ST-5E
		TRAIL	ST-15, (*4)

(*1)CULINARY & SECONDARY WATER LINES LESS THAN 12" TO BE GATE VALVES, LINES 12" & LARGER REQUIRE BUTTERFLY VALVES
(*2)SEE PLAN & PROFILE FOR SIZE & MATERIAL
(*3)SEE LANDSCAPE DESIGN FOR NUMBER OF CONDUITS & SIZES
(*4)SEE PLAN & PROFILE FOR WIDTH & DESIGN MATERIALS
(*5) SEWER SERVICE MINIMUM SLOPE 2%

LEI
- A Utah Corporation -
ENGINEERS
SURVEYORS
PLANNERS
3302 N. Main Street
Spanish Fork, UT 84660
Phone: 801.798.0555
Fax: 801.798.9393
office@lei-eng.com
www.lei-eng.com

STATE OF UTAH
GREGORY D. MAGLEBY
No. 189844
REGISTERED
PROFESSIONAL ENGINEER

WILDFLOWER - VILLAGE 9 - PLAT X-3

CITY OF SARATOGA SPRINGS, UTAH COUNTY, UTAH

EXISTING CONDITIONS & DEMOLITION PLAN

REVISIONS
1 -
2 -
3 -
4 -
5 -

LEI PROJECT #: 2023-0055
DRAWN BY: BLS/MJV
CHECKED BY: GDM
SCALE: 1"=30' (PRINTED ON 24x36)
DATE: 12/23/2025
SHEET C-101

U:\LAND DESKTOP PROJECTS\13-0002 DAI COLLINS BROTHERS\DWG\VILLAGE 9\V9 PLAT X-3\13-0055 X-3 (10) EXISTING.DWG 12/5/2025 3:43 PM

DATA TABLE

	X-3
ASPHALT	22,758 SF
SUB-BASE	27,296 SF
ROAD BASE	27,296 SF
CURB AND GUTTER	1,513 LF
SIDEWALK	1,513 LF
DRIVE APPROACH (RESIDENTIAL)	36 EA
MONUMENTS	1 EA
STREET LIGHT (RESIDENTIAL)	3 EA

SHEET NOTES

1. ALL INTERSECTIONS TO HAVE ADA HANDICAP RAMPS ACCORDING TO CITY STANDARDS.
2. SEE GRADING AND DRAINAGE PLAN FOR GRADING REQUIREMENTS.
3. SEE SIGNAGE & STRIPING PLAN FOR SIGN LOCATIONS.
4. PUBLIC RESIDENTIAL ROADWAY 59 FOOT RIGHT-OF-WAY TO BE INSTALLED PER CITY DETAIL ST-8 (2021). RESIDENTIAL ROADWAY TO UTILIZE STREET PAVEMENT SECTION DETAIL 1 SHEET C-901.

- A Utah Corporation -
ENGINEERS
SURVEYORS
PLANNERS
3302 N. Main Street
Spanish Fork, UT 84660
Phone: 801.798.0555
Fax: 801.798.9393
office@lei-eng.com
www.lei-eng.com

STATE OF UTAH
GREGORY D MAGLESBY
No. 189844
REGISTERED
PROFESSIONAL ENGINEER

WILDFLOWER - VILLAGE 9 - PLAT X-3

CITY OF SARATOGA SPRINGS, UTAH COUNTY, UTAH

SITE PLAN

SCALE: 1"=30'

30 15 0 30

NORTH

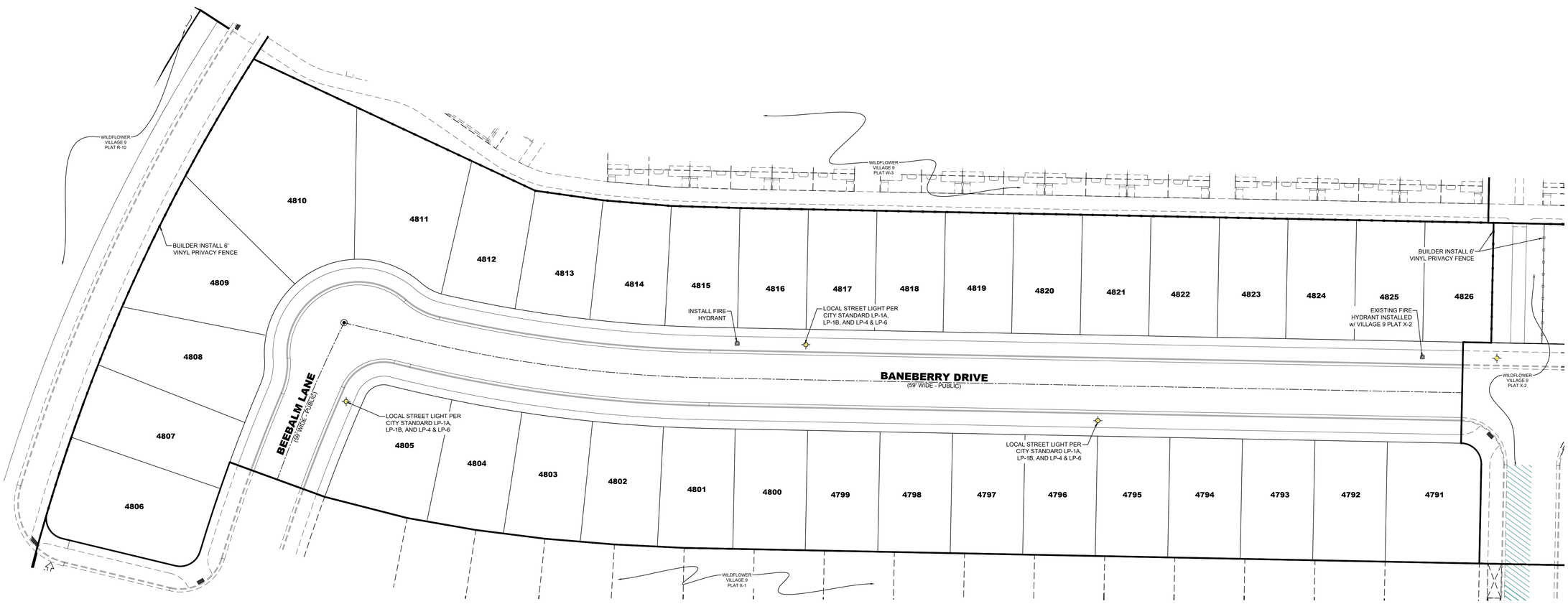

NOTE:
A RIGHT-OF-WAY ENCROACHMENT PERMIT MUST BE OBTAINED FROM THE CITY OF SARATOGA SPRINGS PRIOR TO DOING ANY WORK IN THE EXISTING RIGHT-OF-WAY. APPLY FOR ENCROACHMENT PERMIT AT:
https://cityworks.saratogaspringscity.com/publicaccess/template/login.aspx

CALL BEFORE YOU DIG
IT'S THE LAW
BLUE STAKES 1-800-662-4111

LEGEND

EXISTING	PROPOSED		DETAILS
		BOUNDARY LINE	
		STREET CENTERLINE	
		EASEMENT LINE	
		LOT LINES	
EX SS	SS	SEWER PIPE	SS-1, ST-7, (*2)
		SEWER MANHOLE	SS-2, SS-2A, (*2)
		4" SEWER SERVICE	SS-3, (*5)
EX SD	SD	STORM DRAIN PIPE (RCP)	SD-1, ST-7, (*2)
		STORM DRAIN MANHOLE	SS-2, (*2)
		CURB INLET	SD-2
		COMBO BOX	SD-5
		2'x2' YARD BOX	
		4'x4' CATCH BASIN	(*2)
		3'x3' CATCH BASIN	(*2)
		INLET/OUTLET W/ GRATE	SD-6
EX W	W	CULINARY WATER PIPE	DW-1, DW-2, DW-3, ST-7, (*2)
		45° PIPE ELBOW (W)	DW-2, DW-3, (*2)
		22.5° PIPE ELBOW (W)	DW-2, DW-3, (*2)
		11.25° PIPE ELBOW (W)	DW-2, DW-3, (*2)
		FIRE HYDRANT	DW-4
		3/4" SERVICE & METER (W)	DW-5
		PRV(W)	DW-10A, DW-10B, DW-10C, DW-10D, DW-10E

EXISTING	PROPOSED		DETAILS
		AIR-VAC VALVE (W)	DW-12A, DW-12B, DW-15
		2" BLOW-OFF (W)	DW-13A, DW-15
		VALVE (W & SW)	(*1)(*2)
		TEE	DW-2, (*2)
		CROSS	DW-2, (*2)
EX SW	SW	SECONDARY WATER PIPE	PI-1, PI-2, ST-7, (*2)
		45° PIPE ELBOW (SW)	PI-2, (*2)
		22.5° PIPE ELBOW (SW)	PI-2, (*2)
		11.25° PIPE ELBOW (SW)	PI-2, (*2)
		1" SINGLE SW SERVICE	PI-3, PI-5A, PI-5C
		1-1/2" DUAL SW SERVICE	PI-3, PI-5B, PI-5C
		SW SERVICE TO PARKS	PI-4
		AIR-VAC VALVE (SW)	PI-8A, PI-8B, PI-13
		BACKFLOW PREVENTER	PI-11
		2" BLOW-OFF (SW)	PI-12A, PI-13
		30" C&G (COLLECTOR)	ST-1, ST-2A
		24" C&G (LOCAL)	ST-1, ST-2B
		24" SHED C&G	ST-1, ST-2D
		SIDEWALK	ST-1
STOP	STOP	STOP SIGN	ST-28
		STREET SIGN	ST-28
		MONUMENT	ST-29
		SPRINKLER CONDUIT	ST-8, (*3)

EXISTING	PROPOSED		DETAILS
		FENCE	LS-14, LS15,
		STREET LIGHT LOCAL	LP-1A, LP-1B, LP-4, LP-6
		STREET LIGHT COLLECTOR	LP-2A, LP-2B, LP-2C, LP-5, LP-6
		POWER POLE	
		DITCH	
EX FO		FIBER OPTIC	
EX GAS		GAS	
EX OHP	OHP	OVERHEAD POWER	
		FLOW ARROW	
		CONTOURS	
		100 YEAR FLOOD ROUTE	
		MATCH LINE	
		DRIVE APPROACH	ST-4A, ST-4B
		ADA RAMP	ST-5A, ST-5B, ST-5C, ST-5D, ST-5E
		TRAIL	ST-15, (*4)

(*1)CULINARY & SECONDARY WATER LINES LESS THAN 12" TO BE GATE VALVES, LINES 12" & LARGER REQUIRE BUTTERFLY VALVES
(*2)SEE PLAN & PROFILE FOR SIZE & MATERIAL
(*3)SEE LANDSCAPE DESIGN FOR NUMBER OF CONDUITS & SIZES
(*4)SEE PLAN & PROFILE FOR WIDTH & DESIGN MATERIALS
(*5) SEWER SERVICE MINIMUM SLOPE 2%

REVISIONS
1 -
2 -
3 -
4 -
5 -

LEI PROJECT #: 2023-0055
DRAWN BY: BLS/MJV
CHECKED BY: GDM
SCALE: 1"=30' (PRINTED ON 24x36)
DATE: 12/23/2025
SHEET C-102

U:\LAND DESKTOP PROJECTS\13-0002 DAI COLLINS BROTHERS\DWG\VILLAGE 9\V9 PLAT X-3\23-0055 X-3 (000-102) SHEETS.DWG 12/5/2025 3:41 PM

SHEET NOTES

1. CONTRACTOR TO VERIFY ALL EXISTING CONDITIONS AND LOCATION OF EXISTING UTILITIES PRIOR TO CONSTRUCTION.
2. ALL CULINARY & SECONDARY WATER PIPES TO BE DR-18 PVC.
3. ALL RESIDENTIAL CULINARY WATER METERS TO BE 3/4" DIAMETER. INSTALL POLY PAST THE METERS TO THE LOT SIDE OF THE SIDEWALK ON CULINARY LATERALS, SEE CITY DETAIL CW-5.
4. ALL RESIDENTIAL SECONDARY WATER METER TO BE 1" DIAMETER.
5. ALL CULINARY OR SECONDARY WATER VALVES 12" OR LARGER TO BE BUTTERFLY VALVES, ALL VALVES SMALLER TO BE GATE VALVES.
6. MARKERS MUST BE PLACED AT ALL "OFFSITE" UTILITIES PER CITY STANDARD ST-27.
7. SEE GRADING AND DRAINAGE PLAN FOR GRADING REQUIREMENTS.
8. SEE SIGNAGE & STRIPING PLAN FOR SIGN LOCATIONS.
9. PUBLIC RESIDENTIAL ROADWAY 59 FOOT RIGHT-OF-WAY TO BE INSTALLED PER CITY DETAIL ST-8 (2021). RESIDENTIAL ROADWAY TO UTILIZE STREET PAVEMENT SECTION DETAIL 1 SHEET C-901.
10. CONTRACTOR TO CONFIRM DRIVEWAY LOCATIONS AND PROVIDE FLAT GRATE AS NECESSARY & IN COORDINATION WITH CITY INSPECTOR.
11. SHALLOW SEWER DEPTHS! CONTRACTOR SHALL VERIFY SEWER DEPTHS BEFORE EXCAVATING FOR BASEMENT. HOME(S) WITH BASEMENT MAY NOT HAVE SEWER SERVICE AVAILABLE FOR BASEMENT.
12. ALL STORM DRAIN FACILITIES WILL CONFORM TO THE CITY'S CONSTRUCTION STANDARDS & POLICIES.

DATA TABLE	DRINKING WATER
	PLAT X-3
8" PVC PIPE (LFT)	718
8" GATE VALVE (EA)	0
45° BEND (EA)	2
FIRE HYDRANTS (EA)	2

DATA TABLE	SECONDARY
	PLAT X-3
6" PVC PIPE (LFT)	758
6" GATE VALVE (EA)	0
45° BEND (EA)	2
SINGLE SERVICE (EA)	1
DUAL SERVICE (EA)	16

DATA TABLE	SEWER
	PLAT X-3
8" SDR-35 (LFT)	413
48" MANHOLE (EA)	1
60" MANHOLE (EA)	1
4" LATERALS (EA)	18

NOTE:
A RIGHT-OF-WAY ENCROACHMENT PERMIT MUST BE OBTAINED FROM THE CITY OF SARATOGA SPRINGS PRIOR TO DOING ANY WORK IN THE EXISTING RIGHT-OF-WAY.
APPLY FOR ENCROACHMENT PERMIT AT:
https://cityworks.saratogaspringscity.com/publicaccess/template/login.aspx

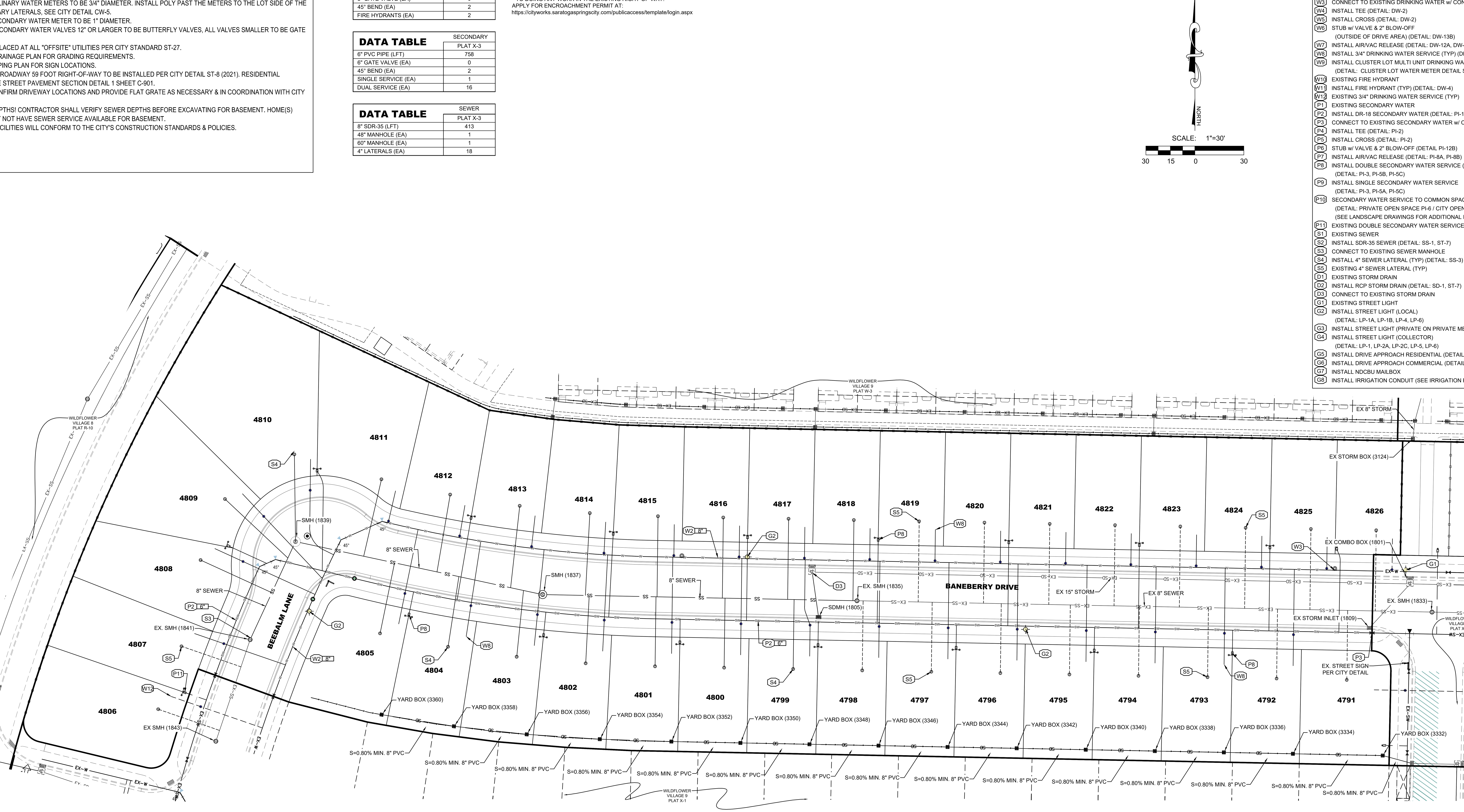

KEYED NOTES

- W1 EXISTING DRINKING WATER
- W2 INSTALL DR-18 DRINKING WATER (DETAIL: DW-1, DW-2, DW-3, ST-7)
- W3 CONNECT TO EXISTING DRINKING WATER w/ CONSTRUCTION VALVE
- W4 INSTALL TEE (DETAIL: DW-2)
- W5 INSTALL CROSS (DETAIL: DW-2)
- W6 STUB w/ VALVE & 2" BLOW-OFF (OUTSIDE OF DRIVE AREA) (DETAIL: DW-13B)
- W7 INSTALL AIR/VAC RELEASE (DETAIL: DW-12A, DW-12B)
- W8 INSTALL 3/4" DRINKING WATER SERVICE (TYP) (DETAIL: DW-5)
- W9 INSTALL CLUSTER LOT MULTI UNIT DRINKING WATER SERVICE (DETAIL: CLUSTER LOT WATER METER DETAIL SH C-201, DW-5A)
- W10 EXISTING FIRE HYDRANT
- W11 INSTALL FIRE HYDRANT (TYP) (DETAIL: DW-4)
- W12 EXISTING 3/4" DRINKING WATER SERVICE (TYP)
- P1 EXISTING SECONDARY WATER
- P2 INSTALL DR-18 SECONDARY WATER (DETAIL: PI-1, PI-2, ST-7)
- P3 CONNECT TO EXISTING SECONDARY WATER w/ CONSTRUCTION VALVE
- P4 INSTALL TEE (DETAIL: PI-2)
- P5 INSTALL CROSS (DETAIL: PI-2)
- P6 STUB w/ VALVE & 2" BLOW-OFF (DETAIL PI-12B)
- P7 INSTALL AIR/VAC RELEASE (DETAIL: PI-8A, PI-8B)
- P8 INSTALL DOUBLE SECONDARY WATER SERVICE (TYP) (DETAIL: PI-3, PI-5B, PI-5C)
- P9 INSTALL SINGLE SECONDARY WATER SERVICE (DETAIL: PI-3, PI-5A, PI-5C)
- P10 SECONDARY WATER SERVICE TO COMMON SPACE (DETAIL: PRIVATE OPEN SPACE PI-6 / CITY OPEN SPACE PI-4) (SEE LANDSCAPE DRAWINGS FOR ADDITIONAL REQUIREMENTS)
- P11 EXISTING DOUBLE SECONDARY WATER SERVICE (TYP)
- S1 EXISTING SEWER
- S2 INSTALL SDR-35 SEWER (DETAIL: SS-1, ST-7)
- S3 CONNECT TO EXISTING SEWER MANHOLE
- S4 INSTALL 4" SEWER LATERAL (TYP) (DETAIL: SS-3)
- S5 EXISTING 4" SEWER LATERAL (TYP)
- D1 EXISTING STORM DRAIN
- D2 INSTALL RCP STORM DRAIN (DETAIL: SD-1, ST-7)
- D3 CONNECT TO EXISTING STORM DRAIN
- G1 EXISTING STREET LIGHT
- G2 INSTALL STREET LIGHT (LOCAL) (DETAIL: LP-1A, LP-1B, LP-4, LP-6)
- G3 INSTALL STREET LIGHT (PRIVATE ON PRIVATE METER)
- G4 INSTALL STREET LIGHT (COLLECTOR) (DETAIL: LP-1, LP-2A, LP-2C, LP-5, LP-6)
- G5 INSTALL DRIVE APPROACH RESIDENTIAL (DETAIL: ST-4A)
- G6 INSTALL DRIVE APPROACH COMMERCIAL (DETAIL ST-4B)
- G7 INSTALL NDCBU MAILBOX
- G8 INSTALL IRRIGATION CONDUIT (SEE IRRIGATION PLANS)

LEGEND

	DETAILS
BOUNDARY LINE	
STREET CENTERLINE	
EASEMENT LINE	
LOT LINES	
SEWER PIPE	SS-1, ST-7, (*2)
SEWER MANHOLE	SS-2, SS-2A, (*2)
4" SEWER SERVICE	SS-3, (*5)
STORM DRAIN PIPE (RCP)	SD-1, ST-7, (*2)
STORM DRAIN MANHOLE	SS-2, (*2)
CURB INLET	SD-2
COMBO BOX	SD-5
2'x2' YARD BOX	
4'x4' CATCH BASIN	(*2)
3'x3' CATCH BASIN	(*2)
INLET/OUTLET W/ GRATE	SD-6
CULINARY WATER PIPE	DW-1, DW-2, DW-3, ST-7, (*2)
45° PIPE ELBOW (W)	DW-2, DW-3, (*2)
22.5° PIPE ELBOW (W)	DW-2, DW-3, (*2)
11.25° PIPE ELBOW (W)	DW-2, DW-3, (*2)
FIRE HYDRANT	DW-4
3/4" SERVICE & METER (W)	DW-5
PRV(W)	DW-10A, DW-10B, DW-10C, DW-10D, DW-10E

	DETAILS
AIR-VAC VALVE (W)	DW-12A, DW-12B, DW-15
2" BLOW-OFF (W)	DW-13A, DW-15
VALVE (W & SW)	(*1)(*2)
TEE	DW-2, (*2)
CROSS	DW-2, (*2)
SECONDARY WATER PIPE	PI-1, PI-2, ST-7, (*2)
45° PIPE ELBOW (SW)	PI-2, (*2)
22.5° PIPE ELBOW (SW)	PI-2, (*2)
11.25° PIPE ELBOW (SW)	PI-2, (*2)
1" SINGLE SW SERVICE	PI-3, PI-5A, PI-5C
1-1/2" DUAL SW SERVICE	PI-3, PI-5B, PI-5C
SW SERVICE TO PARKS	PI-4
AIR-VAC VALVE (SW)	PI-8A, PI-8B, PI-13
BACKFLOW PREVENTER	PI-11
2" BLOW-OFF (SW)	PI-12A, PI-13
30" C&G (COLLECTOR)	ST-1, ST-2A
24" C&G (LOCAL)	ST-1, ST-2B
24" SHED C&G	ST-1, ST-2D
SIDEWALK	ST-1
STOP SIGN	ST-28
STREET SIGN	ST-28
MONUMENT	ST-29
SPRINKLER CONDUIT	ST-8, (*3)

	DETAILS
FENCE	LS-14, LS15,
STREET LIGHT LOCAL	LP-1A, LP-1B, LP-4, LP-6
STREET LIGHT COLLECTOR	LP-2A, LP-2B, LP-2C, LP-5, LP-6
POWER POLE	
DITCH	
FIBER OPTIC	
GAS	
OVERHEAD POWER	
FLOW ARROW	
CONTOURS	
100 YEAR FLOOD ROUTE	
MATCH LINE	
DRIVE APPROACH	ST-4A, ST-4B
ADA RAMP	ST-5A, ST-5B, ST-5C, ST-5D, ST-5E
TRAIL	ST-15, (*4)

(*1)CULINARY & SECONDARY WATER LINES LESS THAN 12" TO BE GATE VALVES, LINES 12" & LARGER REQUIRE BUTTERFLY VALVES
(*2)SEE PLAN & PROFILE FOR SIZE & MATERIAL
(*3)SEE LANDSCAPE DESIGN FOR NUMBER OF CONDUITS & SIZES
(*4)SEE PLAN & PROFILE FOR WIDTH & DESIGN MATERIALS
(*5) SEWER SERVICE MINIMUM SLOPE 2%

CALL BEFORE YOU DIG! IT'S THE LAW. BLUE STAKES 1 800 662 4111

LEI
- A Utah Corporation -
ENGINEERS
SURVEYORS
PLANNERS
3302 N. Main Street
Spanish Fork, UT 84660
Phone: 801.798.0555
Fax: 801.798.9393
office@lei-eng.com
www.lei-eng.com

STATE OF UTAH REGISTERED PROFESSIONAL ENGINEER GREGORY D MAGLEBY No. 189844 12/23/2025

WILDFLOWER - VILLAGE 9 - PLAT X-3
CITY OF SARATOGA SPRINGS, UTAH COUNTY, UTAH
UTILITY PLAN

REVISIONS
1 -
2 -
3 -
4 -
5 -

LEI PROJECT #: 2023-0055
DRAWN BY: BLS/MJV
CHECKED BY: GDM
SCALE: 1"=30' (PRINTED ON 24x36)
DATE: 12/23/2025
SHEET C-201

U:\LAND DESKTOP PROJECTS\23-0055 DAI COLLINS BROTHERS\DWG\VILLAGE 9\V9 PLAT X-3\23-0055 X-3 (201) UTILITY.DWG 12/23/2025 11:34 AM

NOTES

1. ALL ELEVATIONS ARE FINISHED GRADE UNLESS OTHERWISE SPECIFIED.
2. ALL STORM WATER AND DIRT WILL BE KEPT ON SITE DURING CONSTRUCTION UNTIL FINAL LANDSCAPING IS COMPLETED.
3. STREET, CURB & GUTTER WILL BE INSPECTED AND CLEANED OF ALL MUD AND DEBRIS AT THE END OF EVERY DAY.
4. CONTRACTOR SHALL LOCATE SERVICE LATERALS AND VERIFY SEWER LATERAL ELEVATION PRIOR TO SETTING BUILDING TO GRADE.
5. SLOPE FINISH GRADE AWAY FROM THE HOME WITHIN 10 FEET MEASURED PERPENDICULAR TO THE FACE OF THE WALL.
6. SURFACE WATER SHALL DRAIN AWAY FROM THE BUILDING STRUCTURE AT ALL POINTS. DIRECT THE DRAINAGE WATER TO THE STREET OR TO AN APPROVED DRAINAGE COURSE
7. IMPERVIOUS CONCRETE SURFACES WITHIN 10 FEET OF THE BUILDING SHALL BE SLOPED A MINIMUM OF 0.5% AWAY FROM THE BUILDING.
8. CONTRACTOR / DEVELOPER MAY ADJUST SLOPE OF GARAGE FLOOR AND ELEVATION OF GARAGE FLOOR RELATIVE TO THE FINISHED FLOOR AT HIS OR HER DISCRETION
9. CONTRACTOR / DEVELOPER IS RESPONSIBLE TO VERIFY THAT THE DRIVEWAY SLOPE DOES NOT EXCEED 12%
10. FINAL GRADING TO MEET CODE AND CITY ORDINANCES.
11. FOUNDATION DRAINS REQUIRED IF/WHEN SPECIFIED BY CORRESPONDING SOILS REPORT.
12. SLOPES TO THE DRAINAGE SWALES AS SHOWN ON THIS PLAN ARE FROM THE FG @ BUILDING TO THE TOP OF THE SWALE.
13. THE BENCHMARK FOR THE TOPOGRAPHIC INFORMATION HEREON IS THE FOUND 1959 UTAH COUNTY MONUMENT AT THE NORTH 1/4 CORNER OF SECTION 10, WITH A PUBLISHED UTAH COUNTY (NGVD29) ELEVATION OF 4896.76 FEET.
14. AREA SHOWN HEREON FALLS WITHIN FLOOD ZONE "X" (AREA DETERMINED TO BE OUTSIDE OF 500 YEAR FLOOD PLAIN) AS PER FIRM MAP NO. 49049C0150F WITH EFFECTIVE DATE OF JUNE 19, 2020.
15. ALL STORM FLOWS FROM PLAT X-3 HAVE BEEN PLANNED FOR AND ACCOUNTED FOR IN THE DESIGN OF WILDFLOWER PLAT R-4. THIS INCLUDES ALL PIPED FLOWS AND 100-YEAR OVERFLOWS. INLETS HAVE BEEN SIZED ALONG WILD BLOSSOM BOULEVARD AND AT THE LOW POINT TO COLLECT THE FULL 100-YEAR OVERFLOWS TO THE DETENTION BASIN. SEE THE PLAT R-4 DESIGN AND STORM REPORT FOR ADDITIONAL DETAILS.

NOTE:
A RIGHT-OF-WAY ENCROACHMENT PERMIT MUST BE OBTAINED FROM THE CITY OF SARATOGA SPRINGS PRIOR TO DOING ANY WORK IN THE EXISTING RIGHT-OF-WAY. APPLY FOR ENCROACHMENT PERMIT AT:
https://cityworks.saratogaspringscity.com/publicaccess/template/login.aspx

NOTE:
ACCEPTED CONSTRUCTION DRAWINGS AND PRE-CONSTRUCTION MEETING OR A GRADING PERMIT AND PRE-CONSTRUCTION MEETING MUST BE OBTAINED FROM SARATOGA SPRINGS PRIOR TO DISTURBING ANY VEGETATION OR MOVING ANY SOIL. CONTACT THE CITY ENGINEERING DEPARTMENT AT 801-766-9793

I HEREBY CERTIFY THAT THIS DESIGN FOR THE ONSITE DRAINAGE OF THIS DEVELOPMENT WAS PREPARED BY ME (OR UNDER MY DIRECT SUPERVISION) IN ACCORDANCE WITH THE PROVISIONS OF THE CITY OF SARATOGA SPRINGS' STANDARD SPECIFICATIONS AND DRAWINGS, AND WAS DESIGNED TO COMPLY WITH THE PROVISIONS THEREOF. I UNDERSTAND THAT THE CITY ASSUMES NO RESPONSIBILITY OR LIABILITY WHATSOEVER FOR THIS DESIGN.

GREG D. MAGLEBY

LEGEND

- NON-STANDARD RIGHT-OF-WAY
- ROAD SUPER ELEVATION
- SHED CURB
- 100 YEAR OVERFLOW

CUT/FILL FINISHED GRADE

CUT	1,308 CU YD
FILL	19,610 CU YD
NET (FILL)	18,302 CU YD

DATA TABLE

	STORM DRAIN
	PLAT X-2
15" RCP (LF)	28
COMBO BOX (EA)	0
CURB INLET (EA)	1

NORTH

SCALE: 1"=40'

40 20 0 40

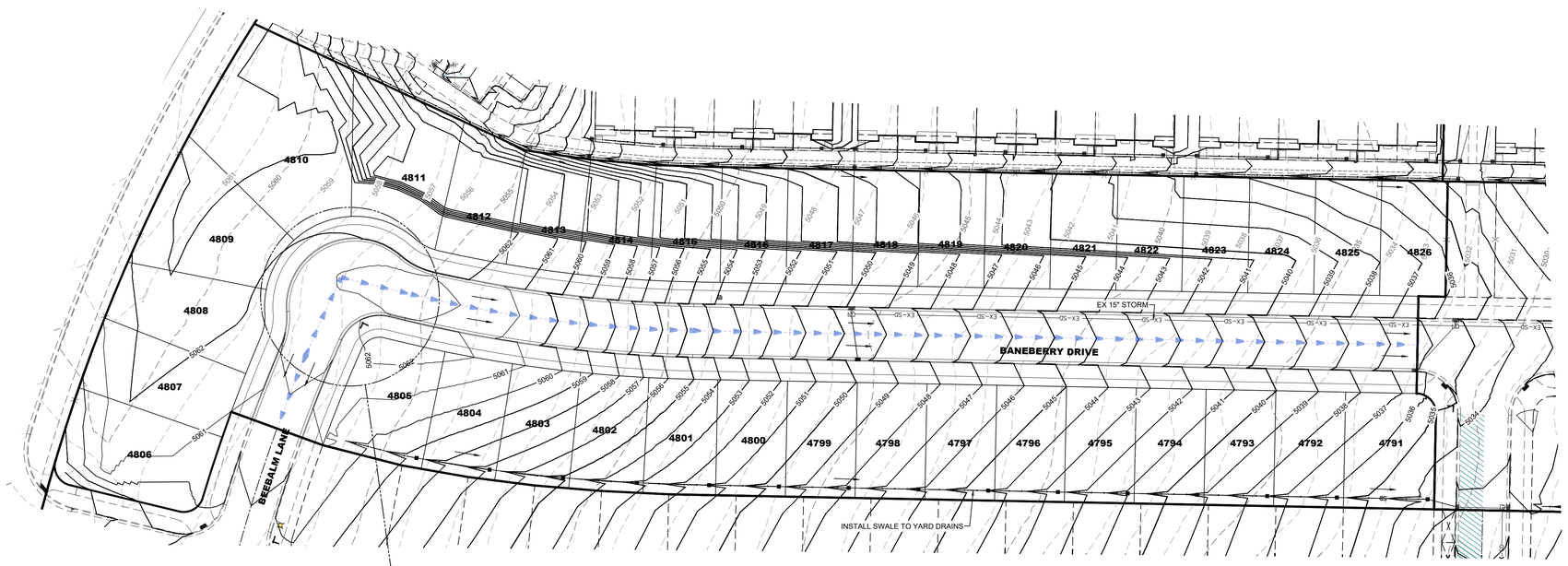

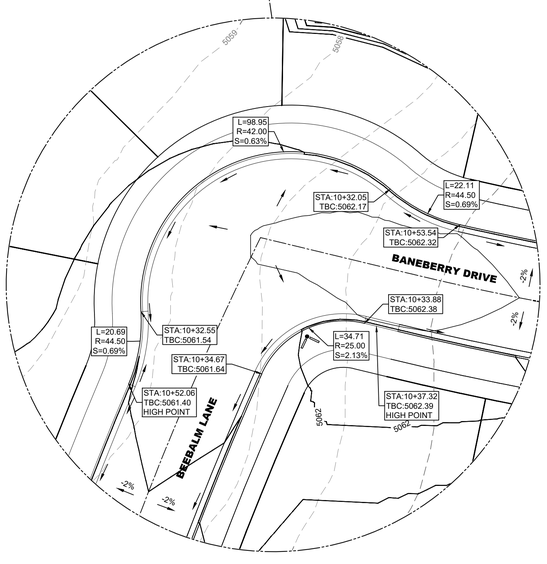

LEGEND

EXISTING	PROPOSED		DETAILS
		BOUNDARY LINE	
		STREET CENTERLINE	
		EASEMENT LINE	
		LOT LINES	
EX SS	SS	SEWER PIPE	SS-1, ST-7, (*2)
		SEWER MANHOLE	SS-2, SS-2A, (*2)
		4" SEWER SERVICE	SS-3, (*5)
EX SD	SD	STORM DRAIN PIPE (RCP)	SD-1, ST-7, (*2)
		STORM DRAIN MANHOLE	SS-2, (*2)
		CURB INLET	SD-2
		COMBO BOX	SD-5
		2'x2' YARD BOX	
		4'x4' CATCH BASIN	(*2)
		3'x3' CATCH BASIN	(*2)
		INLET/OUTLET W/ GRATE	SD-6
EX W	W	CULINARY WATER PIPE	DW-1, DW-2, DW-3, ST-7, (*2)
		45° PIPE ELBOW (W)	DW-2, DW-3, (*2)
		22.5° PIPE ELBOW (W)	DW-2, DW-3, (*2)
		11.25° PIPE ELBOW (W)	DW-2, DW-3, (*2)
		FIRE HYDRANT	DW-4
		3/4" SERVICE & METER (W)	DW-5
		PRV (W)	DW-10A, DW-10B, DW-10C, DW-10D, DW-10E

EXISTING	PROPOSED		DETAILS
		AIR-VAC VALVE (W)	DW-12A, DW-12B, DW-15
		2" BLOW-OFF (W)	DW-13A, DW-15
		VALVE (W & SW)	(*1)(*2)
		TEE	DW-2, (*2)
		CROSS	DW-2, (*2)
EX-SW	SW	SECONDARY WATER PIPE	PI-1, PI-2, ST-7, (*2)
		45° PIPE ELBOW (SW)	PI-2, (*2)
		22.5° PIPE ELBOW (SW)	PI-2, (*2)
		11.25° PIPE ELBOW (SW)	PI-2, (*2)
		1" SINGLE SW SERVICE	PI-3, PI-5A, PI-5C
		1-1/2" DUAL SW SERVICE	PI-3, PI-5B, PI-5C
		SW SERVICE TO PARKS	PI-4
		AIR-VAC VALVE (SW)	PI-8A, PI-8B, PI-13
		BACKFLOW PREVENTER	PI-11
		2" BLOW-OFF (SW)	PI-12A, PI-13
		30" C&G (COLLECTOR)	ST-1, ST-2A
		24" C&G (LOCAL)	ST-1, ST-2B
		24" SHED C&G	ST-1, ST-2D
		SIDEWALK	ST-1
	STOP	STOP SIGN	ST-28
		STREET SIGN	ST-28
		MONUMENT	ST-29
		SPRINKLER CONDUIT	ST-8, (*3)

EXISTING	PROPOSED		DETAILS
		FENCE	LS-14, LS15,
		STREET LIGHT LOCAL	LP-1A, LP-1B, LP-4, LP-6
		STREET LIGHT COLLECTOR	LP-2A, LP-2B, LP-2C, LP-5, LP-6
		POWER POLE	
		DITCH	
EX-FO		FIBER OPTIC	
EX-GAS		GAS	
EX-OHP	OHP	OVERHEAD POWER	
		FLOW ARROW	
		CONTOURS	
		100 YEAR FLOOD ROUTE	
		MATCH LINE	
		DRIVE APPROACH	ST-4A, ST-4B
		ADA RAMP	ST-5A, ST-5B, ST-5C, ST-5D, ST-5E
		TRAIL	ST-15, (*4)

(*1)CULINARY & SECONDARY WATER LINES LESS THAN 12" TO BE GATE VALVES, LINES 12" & LARGER REQUIRE BUTTERFLY VALVES
(*2)SEE PLAN & PROFILE FOR SIZE & MATERIAL
(*3)SEE LANDSCAPE DESIGN FOR NUMBER OF CONDUITS & SIZES
(*4)SEE PLAN & PROFILE FOR WIDTH & DESIGN MATERIALS
(*5) SEWER SERVICE MINIMUM SLOPE 2%

LEI
- A Utah Corporation -
ENGINEERS
SURVEYORS
PLANNERS
3302 N. Main Street
Spanish Fork, UT 84660
Phone: 801.798.0555
Fax: 801.798.9393
office@lei-eng.com
www.lei-eng.com

STATE OF UTAH
GREGORY D MAGLEBY
No. 189844
REGISTERED
PROFESSIONAL ENGINEER

WILDFLOWER - VILLAGE 9 - PLAT X-3

CITY OF SARATOGA SPRINGS, UTAH COUNTY, UTAH

GRADING & DRAINAGE PLAN (OVERALL)

CALL BEFORE YOU DIG
BLUE STAKES 1-800-662-4111

REVISIONS
1 -
2 -
3 -
4 -
5 -

LEI PROJECT #: 2023-0055
DRAWN BY: BLS/MJV
CHECKED BY: GDM
SCALE: 1"=40' (PRINTED ON 24x36)
DATE: 12/23/2025
SHEET C-301

U:\LAND DESKTOP PROJECTS\13-0002 DAI COLLINS BROTHERS\DWG\VILLAGE 9\VB PLAT X-3\23-0055 X-3 (301) GRADING.DWG 12/23/2025 2:24 PM

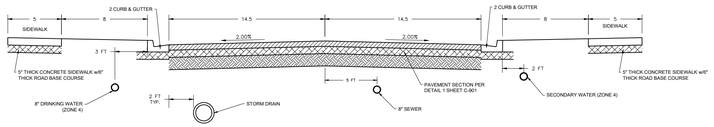

KEY MAP

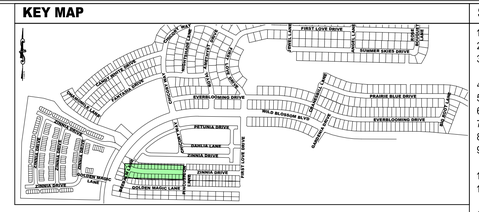

SHEET NOTES

1. CONTRACTOR TO VERIFY ALL EXISTING CONDITIONS AND LOCATION OF EXISTING UTILITIES PRIOR TO CONSTRUCTION.
2. ALL CULINARY & SECONDARY WATER PIPES TO BE DR-18 PVC.
3. ALL RESIDENTIAL CULINARY WATER METERS TO BE 3/4" DIAMETER. INSTALL POLY PAST THE METERS TO THE LOT SIDE OF THE SIDEWALK ON CULINARY LATERALS, SEE CITY DETAIL CW-5.
4. ALL RESIDENTIAL SECONDARY WATER METER TO BE 1" DIAMETER.
5. ALL CULINARY OR SECONDARY WATER VALVES 12" OR SMALLER TO BE GATE VALVES, VALVES LARGER TO BE BUTTERFLY VALVES.
6. MARKERS MUST BE PLACED AT ALL "OFFSITE" UTILITIES PER CITY STANDARD ST-27.
7. SEE GRADING AND DRAINAGE PLAN FOR GRADING REQUIREMENTS.
8. SEE SIGNAGE & STRIPING PLAN FOR SIGN LOCATIONS.
9. PUBLIC RESIDENTIAL ROADWAY 59 FOOT RIGHT-OF-WAY TO BE INSTALLED PER CITY DETAIL ST-8 (2021). RESIDENTIAL ROADWAY TO UTILIZE STREET PAVEMENT SECTION DETAIL 1 SHEET C-901.
10. CONTRACTOR TO CONFIRM DRIVEWAY LOCATIONS AND PROVIDE FLAT GRATE AS NECESSARY & IN COORDINATION WITH CITY INSPECTOR.
11. SHALLOW SEWER DEPTHS! CONTRACTOR SHALL VERIFY SEWER DEPTHS BEFORE EXCAVATING FOR BASEMENT. HOME(S) WITH BASEMENT MAY NOT HAVE SEWER SERVICE AVAILABLE FOR BASEMENT.
12. ALL STORM DRAIN FACILITIES WILL CONFORM TO THE CITY'S CONSTRUCTION STANDARDS & POLICIES.

LEGEND

- NON-STANDARD RIGHT-OF-WAY
- ROAD SUPER ELEVATION
- SHED CURB

KEYED NOTES

W1	EXISTING DRINKING WATER
W2	INSTALL DR-18 DRINKING WATER (DETAIL: DW-1, DW-2, DW-3, ST-7)
W3	CONNECT TO EXISTING DRINKING WATER w/ CONSTRUCTION VALVE
W4	INSTALL TEE (DETAIL: DW-2)
W5	INSTALL CROSS (DETAIL: DW-2)
W6	STUB w/ VALVE & 2" BLOW-OFF (OUTSIDE OF DRIVE AREA) (DETAIL: DW-13B)
W7	INSTALL AIR/VAC RELEASE (DETAIL: DW-12A, DW-12B)
W8	INSTALL 3/4" DRINKING WATER SERVICE (TYP) (DETAIL: DW-5)
W9	INSTALL CLUSTER LOT MULTI UNIT DRINKING WATER SERVICE (DETAIL: CLUSTER LOT WATER METER DETAIL SH C-201, DW-5A)
W10	EXISTING FIRE HYDRANT
W11	INSTALL FIRE HYDRANT (TYP) (DETAIL: DW-4)
W12	EXISTING 3/4" DRINKING WATER SERVICE (TYP)
P1	EXISTING SECONDARY WATER
P2	INSTALL DR-18 SECONDARY WATER (DETAIL: PI-1, PI-2, ST-7)
P3	CONNECT TO EXISTING SECONDARY WATER w/ CONSTRUCTION VALVE
P4	INSTALL TEE (DETAIL: PI-2)
P5	INSTALL CROSS (DETAIL: PI-2)
P6	STUB w/ VALVE & 2" BLOW-OFF (DETAIL PI-12B)
P7	INSTALL AIR/VAC RELEASE (DETAIL: PI-8A, PI-8B)
P8	INSTALL DOUBLE SECONDARY WATER SERVICE (TYP) (DETAIL: PI-3, PI-5B, PI-5C)
P9	INSTALL SINGLE SECONDARY WATER SERVICE (DETAIL: PI-3, PI-5A, PI-5C)
P10	SECONDARY WATER SERVICE TO COMMON SPACE (DETAIL: PRIVATE OPEN SPACE PI-6 / CITY OPEN SPACE PI-4) (SEE LANDSCAPE DRAWINGS FOR ADDITIONAL REQUIREMENTS)
P11	EXISTING DOUBLE SECONDARY WATER SERVICE (TYP)
S1	EXISTING SEWER
S2	INSTALL SDR-35 SEWER (DETAIL: SS-1, ST-7)
S3	CONNECT TO EXISTING SEWER MANHOLE
S4	INSTALL 4" SEWER LATERAL (TYP) (DETAIL: SS-3)
S5	EXISTING 4" SEWER LATERAL (TYP)
D1	EXISTING STORM DRAIN
D2	INSTALL RCP STORM DRAIN (DETAIL: SD-1, ST-7)
D3	CONNECT TO EXISTING STORM DRAIN
G1	EXISTING STREET LIGHT
G2	INSTALL STREET LIGHT (LOCAL) (DETAIL: LP-1A, LP-1B, LP-4, LP-6)
G3	INSTALL STREET LIGHT (PRIVATE ON PRIVATE METER)
G4	INSTALL STREET LIGHT (COLLECTOR) (DETAIL: LP-1, LP-2A, LP-2C, LP-5, LP-6)
G5	INSTALL DRIVE APPROACH RESIDENTIAL (DETAIL: ST-4A)
G6	INSTALL DRIVE APPROACH COMMERCIAL (DETAIL ST-4B)
G7	INSTALL NDCBU MAILBOX
G8	INSTALL IRRIGATION CONDUIT (SEE IRRIGATION PLANS)

LEI
- A Utah Corporation -
ENGINEERS
SURVEYORS
PLANNERS
3302 N. Main Street
Spanish Fork, UT 84660
Phone: 801.798.0555
Fax: 801.798.9393
office@lei-eng.com
www.lei-eng.com

STATE OF UTAH — GREGORY D. MAGLEBY — No. 189844 — REGISTERED PROFESSIONAL ENGINEER

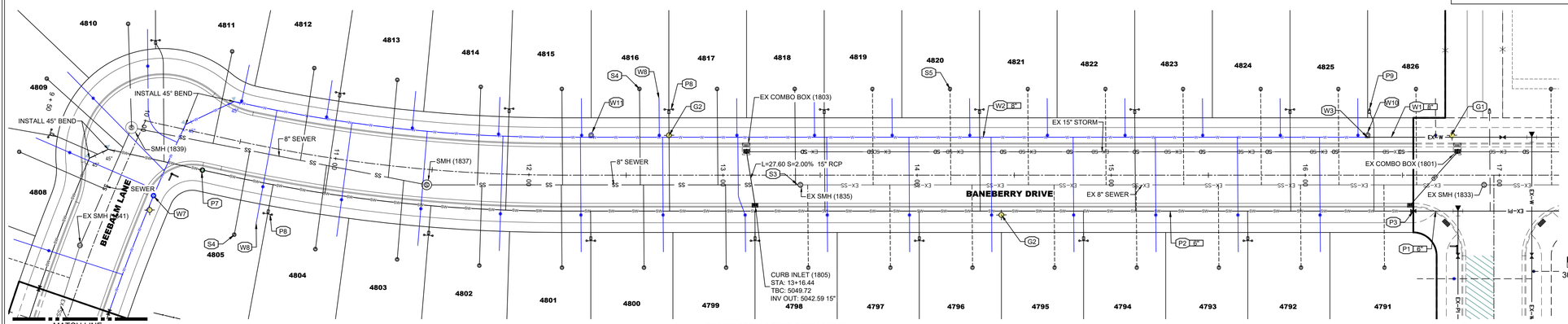

BANEBERRY DRIVE PLAN VIEW

CENTER LINE OMITTED FOR CLARITY

NOTE:
A RIGHT-OF-WAY ENCROACHMENT PERMIT MUST BE OBTAINED FROM THE CITY OF SARATOGA SPRINGS PRIOR TO DOING ANY WORK IN THE EXISTING RIGHT-OF-WAY. APPLY FOR ENCROACHMENT PERMIT AT: https://cityworks.saratogaspringscity.com/publicaccess/template/login.aspx

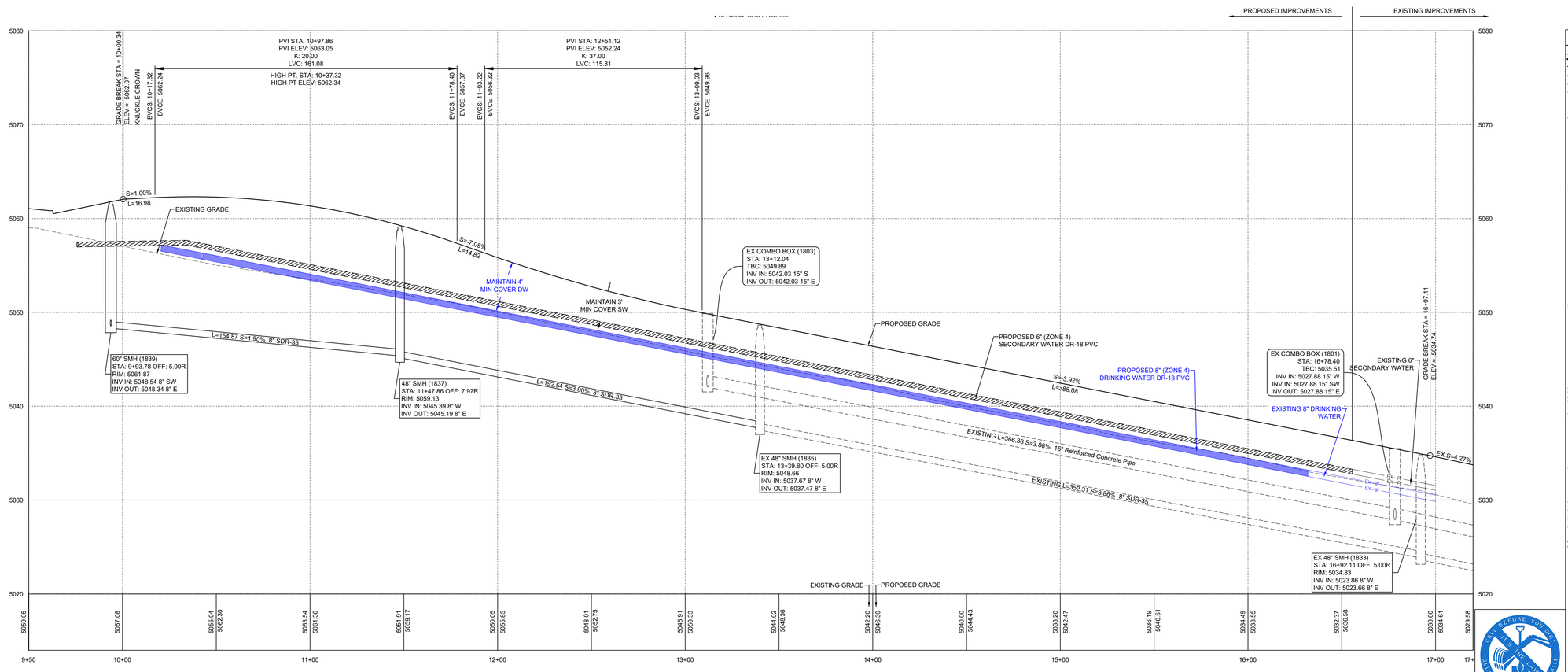

BANEBERRY DRIVE PROFILE VIEW

LEGEND

EXISTING	PROPOSED		DETAILS
		BOUNDARY LINE	
		STREET CENTERLINE	
		EASEMENT LINE	
		LOT LINES	
EX SS	SS	SEWER PIPE	SS-1, ST-7, (*2)
		SEWER MANHOLE	SS-2, SS-2A, (*2)
		4" SEWER CLEANOUT	SS-3, (*5)
EX SD	SD	STORM DRAIN PIPE (RCP)	SD-1, ST-7, (*2)
		STORM DRAIN MANHOLE	SS-2, (*2)
		CURB INLET	SD-2
		COMBO BOX	SD-5
		2'x2' YARD BOX	
		4'x4' CATCH BASIN	(*2)
		3'x3' CATCH BASIN	(*2)
		INLET/OUTLET W/ GRATE	SD-6
EX W	W	CULINARY WATER PIPE	DW-1, DW-2, DW-3, ST-7, (*2)
		45° PIPE ELBOW (W)	DW-2, DW-3, (*2)
		22.5° PIPE ELBOW (W)	DW-2, DW-3, (*2)
		11.25° PIPE ELBOW (W)	DW-2, DW-3, (*2)
		FIRE HYDRANT	DW-4
		3/4" SERVICE & METER (W)	DW-5
		PRV(W)	DW-10A, DW-10B, DW-10C, DW10-D, DW-10E
		AIR-VAC VALVE (W)	DW-12A, DW-12B, DW-15
		2" BLOW-OFF (W)	DW-13A, DW-15
		VALVE (W & SW)	(*1)(*2)
		TEE	DW-2, (*2)
		CROSS	DW-2, (*2)
EX SW	SW	SECONDARY WATER PIPE	PI-1, PI-2, ST-7, (*2)
		45° PIPE ELBOW (SW)	PI-2, (*2)
		22.5° PIPE ELBOW (SW)	PI-2, (*2)
		11.25° PIPE ELBOW (SW)	PI-2, (*2)
		1" SINGLE SW SERVICE	PI-3, PI-5A, PI-5C
		1-1/2" DUAL SW SERVICE	PI-3, PI-5B, PI-5C
		SW SERVICE TO PARKS	PI-4
		AIR-VAC VALVE (SW)	PI-8A, PI-8B, PI-13
		BACKFLOW PREVENTER	PI-11
		2" BLOW-OFF (SW)	PI-12A, PI-13
		30" C&G (COLLECTOR)	ST-1, ST-2A
		24" C&G (LOCAL)	ST-1, ST-2B
		24" SHED C&G	ST-1, ST-2D
		SIDEWALK	ST-1
	STOP	STOP SIGN	ST-28
		STREET SIGN	ST-28
		MONUMENT	ST-29
		SPRINKLER CONDUIT	ST-8, (*3)
		FENCE	LS-14, LS-15
		STREET LIGHT LOCAL	LP-1A, LP-1B, LP-4, LP-6
		STREET LIGHT COLLECTOR	LP-2A, LP-2B, LP-2C, LP-5, LP-6
		POWER POLE	
		DITCH	
EX FO		FIBER OPTIC	
EX GAS		GAS	
EX OHP	OHP	OVERHEAD POWER	
		FLOW ARROW	
		CONTOURS	
		100 YEAR FLOOD ROUTE	
		MATCH LINE	
		DRIVE APPROACH	ST-4, ST-4B
		ADA RAMP	ST-5A, ST-5B, ST-5C, ST-5D, ST-5E
		TRAIL	ST-15, (*4)

(*1)CULINARY & SECONDARY WATER LINES LESS THAN 12" TO BE GATE VALVES, LINES 12" & LARGER REQUIRE BUTTERFLY VALVES
(*2)SEE PLAN & PROFILE FOR SIZE & MATERIAL
(*3)SEE LANDSCAPE DESIGN FOR NUMBER OF CONDUITS & SIZES
(*4)SEE PLAN & PROFILE FOR WIDTH & DESIGN MATERIALS
(*5) SEWER SERVICE MINIMUM SLOPE 2%

WILDFLOWER - VILLAGE 9 - PLAT X-3

CITY OF SARATOGA SPRINGS, UTAH COUNTY, UTAH

BANEBERRY DRIVE PLAN & PROFILE - DRINKING WATER

STA: 9+75 TO 17+00

REVISIONS
1 -
2 -
3 -
4 -
5 -

LEI PROJECT #: 2023-0055
DRAWN BY: BLS/MJV
CHECKED BY: GDM
SCALE: 1"=30' (PRINTED ON 24x36)
DATE: 12/23/2025
SHEET C-401 DW

12/23/2025 1:29 PM
U:\LAND DESKTOP PROJECTS\13-0002 DW COLLINS BROTHERS\DWG\VILLAGE 9\VI PLAT X-3\23-0055 X-3 (401-402DW) BANEBERRY.DWG

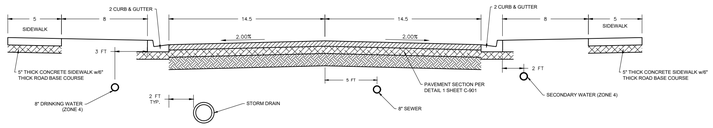

KEY MAP

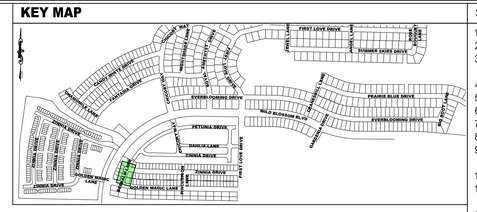

SHEET NOTES

1. CONTRACTOR TO VERIFY ALL EXISTING CONDITIONS AND LOCATION OF EXISTING UTILITIES PRIOR TO CONSTRUCTION.
2. ALL CULINARY & SECONDARY WATER PIPES TO BE DR-18 PVC.
3. ALL RESIDENTIAL CULINARY WATER METERS TO BE 3/4" DIAMETER. INSTALL POLY PAST THE METERS TO THE LOT SIDE OF THE SIDEWALK ON CULINARY LATERALS, SEE CITY DETAIL CW-5.
4. ALL RESIDENTIAL SECONDARY WATER METER TO BE 1" DIAMETER.
5. ALL CULINARY OR SECONDARY WATER VALVES 12" OR SMALLER TO BE GATE VALVES, VALVES LARGER TO BE BUTTERFLY VALVES.
6. MARKERS MUST BE PLACED AT ALL "OFFSITE" UTILITIES PER CITY STANDARD ST-27.
7. SEE GRADING AND DRAINAGE PLAN FOR GRADING REQUIREMENTS.
8. SEE SIGNAGE & STRIPING PLAN FOR SIGN LOCATIONS.
9. PUBLIC RESIDENTIAL ROADWAY 59 FOOT RIGHT-OF-WAY TO BE INSTALLED PER CITY DETAIL ST-8 (2021). RESIDENTIAL ROADWAY TO UTILIZE STREET PAVEMENT SECTION DETAIL 1 SHEET C-901.
10. CONTRACTOR TO CONFIRM DRIVEWAY LOCATIONS AND PROVIDE FLAT GRATE AS NECESSARY & IN COORDINATION WITH CITY INSPECTOR.
11. SHALLOW SEWER DEPTHS! CONTRACTOR SHALL VERIFY SEWER DEPTHS BEFORE EXCAVATING FOR BASEMENT. HOME(S) WITH BASEMENT MAY NOT HAVE SEWER SERVICE AVAILABLE FOR BASEMENT.
12. ALL STORM DRAIN FACILITIES WILL CONFORM TO THE CITY'S CONSTRUCTION STANDARDS & POLICIES.

LEGEND

- NON-STANDARD RIGHT-OF-WAY
- ROAD SUPER ELEVATION
- SHED CURB

KEYED NOTES

W1	EXISTING DRINKING WATER
W2	INSTALL DR-18 DRINKING WATER (DETAIL: DW-1, DW-2, DW-3, ST-7)
W3	CONNECT TO EXISTING DRINKING WATER w/ CONSTRUCTION VALVE
W4	INSTALL TEE (DETAIL: DW-2)
W5	INSTALL CROSS (DETAIL: DW-2)
W6	STUB w/ VALVE & 2" BLOW-OFF (OUTSIDE OF DRIVE AREA) (DETAIL: DW-13B)
W7	INSTALL AIR/VAC RELEASE (DETAIL: DW-12A, DW-12B)
W8	INSTALL 3/4" DRINKING WATER SERVICE (TYP) (DETAIL: DW-5)
W9	INSTALL CLUSTER LOT MULTI UNIT DRINKING WATER SERVICE (DETAIL: CLUSTER LOT WATER METER DETAIL SH C-201, DW-5A)
W10	EXISTING FIRE HYDRANT
W11	INSTALL FIRE HYDRANT (TYP) (DETAIL: DW-4)
W12	EXISTING 3/4" DRINKING WATER SERVICE (TYP)
P1	EXISTING SECONDARY WATER
P2	INSTALL DR-18 SECONDARY WATER (DETAIL: PI-1, PI-2, ST-7)
P3	CONNECT TO EXISTING SECONDARY WATER w/ CONSTRUCTION VALVE
P4	INSTALL TEE (DETAIL: PI-2)
P5	INSTALL CROSS (DETAIL: PI-2)
P6	STUB w/ VALVE & 2" BLOW-OFF (DETAIL PI-12B)
P7	INSTALL AIR/VAC RELEASE (DETAIL: PI-8A, PI-8B)
P8	INSTALL DOUBLE SECONDARY WATER SERVICE (TYP) (DETAIL: PI-3, PI-5B, PI-5C)
P9	INSTALL SINGLE SECONDARY WATER SERVICE (DETAIL: PI-3, PI-5A, PI-5C)
P10	SECONDARY WATER SERVICE TO COMMON SPACE (DETAIL: PRIVATE OPEN SPACE PI-6 / CITY OPEN SPACE PI-4) (SEE LANDSCAPE DRAWINGS FOR ADDITIONAL REQUIREMENTS)
P11	EXISTING DOUBLE SECONDARY WATER SERVICE (TYP)
S1	EXISTING SEWER
S2	INSTALL SDR-35 SEWER (DETAIL: SS-1, ST-7)
S3	CONNECT TO EXISTING SEWER MANHOLE
S4	INSTALL 4" SEWER LATERAL (TYP) (DETAIL: SS-3)
S5	EXISTING 4" SEWER LATERAL (TYP)
D1	EXISTING STORM DRAIN
D2	INSTALL RCP STORM DRAIN (DETAIL: SD-1, ST-7)
D3	CONNECT TO EXISTING STORM DRAIN
G1	EXISTING STREET LIGHT
G2	INSTALL STREET LIGHT (LOCAL) (DETAIL: LP-1A, LP-1B, LP-4, LP-6)
G3	INSTALL STREET LIGHT (PRIVATE ON PRIVATE METER)
G4	INSTALL STREET LIGHT (COLLECTOR) (DETAIL: LP-1, LP-2A, LP-2C, LP-5, LP-6)
G5	INSTALL DRIVE APPROACH RESIDENTIAL (DETAIL: ST-4A)
G6	INSTALL DRIVE APPROACH COMMERCIAL (DETAIL ST-4B)
G7	INSTALL NDCBU MAILBOX
G8	INSTALL IRRIGATION CONDUIT (SEE IRRIGATION PLANS)

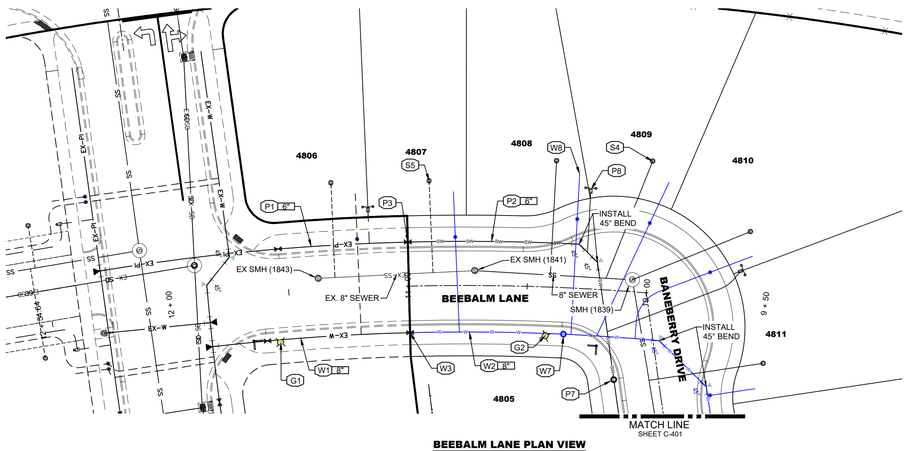

BEEBALM LANE PLAN VIEW

CENTER LINE OMITTED FOR CLARITY

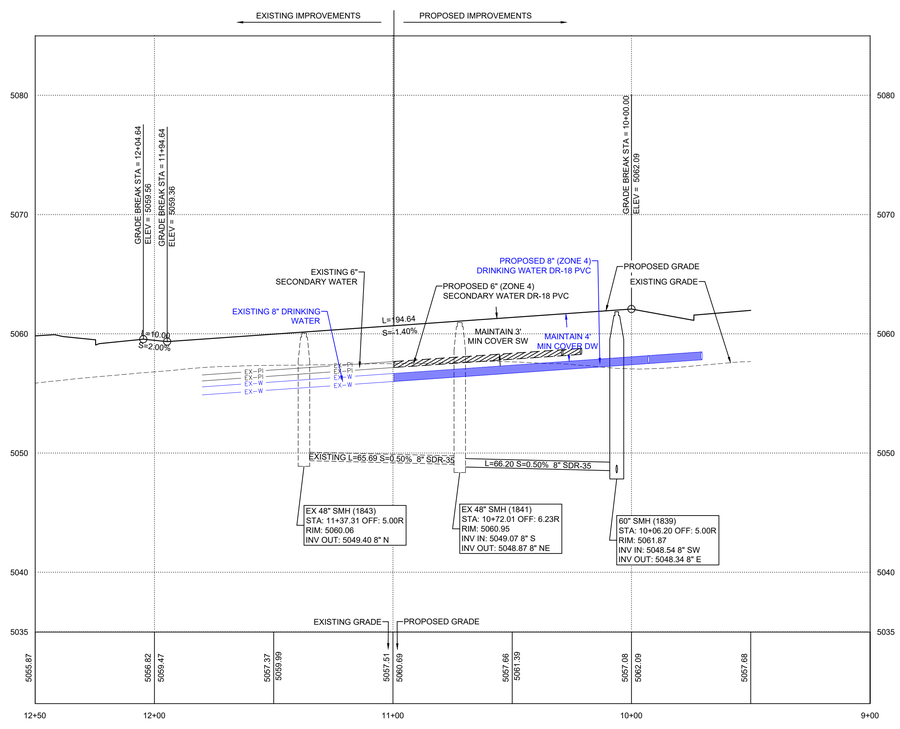

BEEBALM LANE PROFILE VIEW

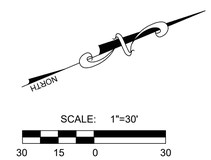

NOTE:
A RIGHT-OF-WAY ENCROACHMENT PERMIT MUST BE OBTAINED FROM THE CITY OF SARATOGA SPRINGS PRIOR TO DOING ANY WORK IN THE EXISTING RIGHT-OF-WAY.
APPLY FOR ENCROACHMENT PERMIT AT:
https://cityworks.saratogaspringscity.com/publicaccess/template/login.aspx

LEGEND

EXISTING	PROPOSED		DETAILS
		BOUNDARY LINE	
		STREET CENTERLINE	
		EASEMENT LINE	
		LOT LINES	
EX SS	SS	SEWER PIPE	SS-1, ST-7, (*2)
		SEWER MANHOLE	SS-2, SS-2A, (*2)
		4" SEWER CLEANOUT	SS-3, (*5)
EX SD	SD	STORM DRAIN PIPE (RCP)	SD-1, ST-7, (*2)
		STORM DRAIN MANHOLE	SS-2, (*2)
		CURB INLET	SD-2
		COMBO BOX	SD-5
		2'x2' YARD BOX	
		4'x4' CATCH BASIN	(*2)
		3'x3' CATCH BASIN	(*2)
		INLET/OUTLET W/ GRATE	SD-6
EX W	W	CULINARY WATER PIPE	DW-1, DW-2, DW-3, ST-7, (*2)
		45° PIPE ELBOW (W)	DW-2, DW-3, (*2)
		22.5° PIPE ELBOW (W)	DW-2, DW-3, (*2)
		11.25° PIPE ELBOW (W)	DW-2, DW-3, (*2)
		FIRE HYDRANT	DW-4
		3/4" SERVICE & METER (W)	DW-5
		PRV(W)	DW-10A, DW-10B, DW-10C, DW10-D, DW-10E
		AIR-VAC VALVE (W)	DW-12A, DW-12B, DW-15
		2" BLOW-OFF (W)	DW-13A, DW-15
H		VALVE (W & SW)	(*1)(*2)
		TEE	DW-2, (*2)
		CROSS	DW-2, (*2)
EX SW	SW	SECONDARY WATER PIPE	PI-1, PI-2, ST-7, (*2)
		45° PIPE ELBOW (SW)	PI-2, (*2)
		22.5° PIPE ELBOW (SW)	PI-2, (*2)
		11.25° PIPE ELBOW (SW)	PI-2, (*2)
		1" SINGLE SW SERVICE	PI-3, PI-5A, PI-5C
		1-1/2" DUAL SW SERVICE	PI-3, PI-5B, PI-5C
		SW SERVICE TO PARKS	PI-4
		AIR-VAC VALVE (SW)	PI-8A, PI-B, PI-13
		BACKFLOW PREVENTER	PI-11
		2" BLOW-OFF (SW)	PI-12A, PI-13
		30" C&G (COLLECTOR)	ST-1, ST-2A
		24" C&G (LOCAL)	ST-1, ST-2B
		24" SHED C&G	ST-1, ST-2D
		SIDEWALK	ST-1
		STOP SIGN	ST-28
		STREET SIGN	ST-28
		MONUMENT	ST-29
		SPRINKLER CONDUIT	ST-8, (*3)
		FENCE	LS-14, LS-15
		STREET LIGHT LOCAL	LP-1A, LP-1B, LP-4, LP-6
		STREET LIGHT COLLECTOR	LP-2A, LP-2B, LP-2C, LP-5, LP-6
		POWER POLE	
		DITCH	
EX FO		FIBER OPTIC	
EX GAS		GAS	
EX OHP	OHP	OVERHEAD POWER	
		FLOW ARROW	
		CONTOURS	
		100 YEAR FLOOD ROUTE	
		MATCH LINE	
		DRIVE APPROACH	ST-4, ST-4B
		ADA RAMP	ST-5A, ST-5B, ST-5C, ST-5D, ST-5E
		TRAIL	ST-15, (*4)

(*1)CULINARY & SECONDARY WATER LINES LESS THAN 12" TO BE GATE VALVES, LINES 12" & LARGER REQUIRE BUTTERFLY VALVES
(*2)SEE PLAN & PROFILE FOR SIZE & MATERIAL
(*3)SEE LANDSCAPE DESIGN FOR NUMBER OF CONDUITS & SIZES
(*4)SEE PLAN & PROFILE FOR WIDTH & DESIGN MATERIALS
(*5) SEWER SERVICE MINIMUM SLOPE 2%

CALL BEFORE YOU DIG
BLUE STAKES 1-800-662-4111

LEI
- A Utah Corporation -
ENGINEERS
SURVEYORS
PLANNERS
3302 N. Main Street
Spanish Fork, UT 84660
Phone: 801.798.0555
Fax: 801.798.9393
office@lei-eng.com
www.lei-eng.com

STATE OF UTAH
GREGORY D. MAGLEBY
No. 189844
REGISTERED
PROFESSIONAL ENGINEER

WILDFLOWER - VILLAGE 9 - PLAT X-3

CITY OF SARATOGA SPRINGS, UTAH COUNTY, UTAH

BEEBALM LANE PLAN & PROFILE - DRINKING WATER

STA: 11+80 TO 9+50

REVISIONS
1 -
2 -
3 -
4 -
5 -

LEI PROJECT #: 2023-0055
DRAWN BY: BLS/MJV
CHECKED BY: GDM
SCALE: 1"=30' (PRINTED ON 24x36)
DATE: 12/23/2025
SHEET C-402 DW

U:\LAND DESKTOP PROJECTS\13-0002 DAI COLLINS BROTHERS\DWG\VILLAGE 9\V9 PLAT X-3\23-0055 X-3 (401-402DW) BANEBERRY.DWG 12/23/2025 1:29 PM

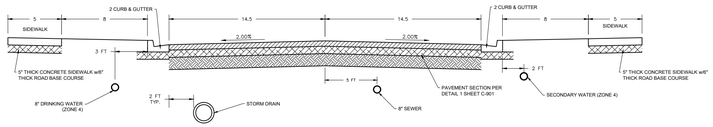

KEY MAP

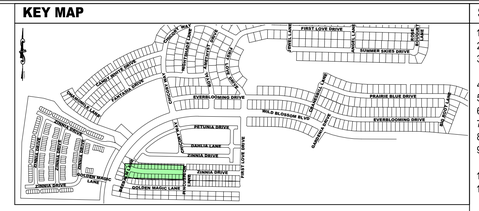

SHEET NOTES

1. CONTRACTOR TO VERIFY ALL EXISTING CONDITIONS AND LOCATION OF EXISTING UTILITIES PRIOR TO CONSTRUCTION.
2. ALL CULINARY & SECONDARY WATER PIPES TO BE DR-18 PVC.
3. ALL RESIDENTIAL CULINARY WATER METERS TO BE 3/4" DIAMETER. INSTALL POLY PAST THE METERS TO THE LOT SIDE OF THE SIDEWALK ON CULINARY LATERALS, SEE CITY DETAIL CW-5.
4. ALL RESIDENTIAL SECONDARY WATER METER TO BE 1" DIAMETER.
5. ALL CULINARY OR SECONDARY WATER VALVES 12" OR SMALLER TO BE GATE VALVES, VALVES LARGER TO BE BUTTERFLY VALVES.
6. MARKERS MUST BE PLACED AT ALL "OFFSITE" UTILITIES PER CITY STANDARD ST-27.
7. SEE GRADING AND DRAINAGE PLAN FOR GRADING REQUIREMENTS.
8. SEE SIGNAGE & STRIPING PLAN FOR SIGN LOCATIONS.
9. PUBLIC RESIDENTIAL ROADWAY 59 FOOT RIGHT-OF-WAY TO BE INSTALLED PER CITY DETAIL ST-8 (2021). RESIDENTIAL ROADWAY TO UTILIZE STREET PAVEMENT SECTION DETAIL 1 SHEET C-901.
10. CONTRACTOR TO CONFIRM DRIVEWAY LOCATIONS AND PROVIDE FLAT GRATE AS NECESSARY & IN COORDINATION WITH CITY INSPECTOR.
11. SHALLOW SEWER DEPTHS! CONTRACTOR SHALL VERIFY SEWER DEPTHS BEFORE EXCAVATING FOR BASEMENT. HOME(S) WITH BASEMENT MAY NOT HAVE SEWER SERVICE AVAILABLE FOR BASEMENT.
12. ALL STORM DRAIN FACILITIES WILL CONFORM TO THE CITY'S CONSTRUCTION STANDARDS & POLICIES.

LEGEND

- NON-STANDARD RIGHT-OF-WAY
- ROAD SUPER ELEVATION
- SHED CURB

KEYED NOTES

W1	EXISTING DRINKING WATER
W2	INSTALL DR-18 DRINKING WATER (DETAIL: DW-1, DW-2, DW-3, ST-7)
W3	CONNECT TO EXISTING DRINKING WATER w/ CONSTRUCTION VALVE
W4	INSTALL TEE (DETAIL: DW-2)
W5	INSTALL CROSS (DETAIL: DW-2)
W6	STUB w/ VALVE & 2" BLOW-OFF (OUTSIDE OF DRIVE AREA) (DETAIL: DW-13B)
W7	INSTALL AIR/VAC RELEASE (DETAIL: DW-12A, DW-12B)
W8	INSTALL 3/4" DRINKING WATER SERVICE (TYP) (DETAIL: DW-5)
W9	INSTALL CLUSTER LOT MULTI UNIT DRINKING WATER SERVICE (DETAIL: CLUSTER LOT WATER METER DETAIL SH C-201, DW-5A)
W10	EXISTING FIRE HYDRANT
W11	INSTALL FIRE HYDRANT (TYP) (DETAIL: DW-4)
W12	EXISTING 3/4" DRINKING WATER SERVICE (TYP)
P1	EXISTING SECONDARY WATER
P2	INSTALL DR-18 SECONDARY WATER (DETAIL: PI-1, PI-2, ST-7)
P3	CONNECT TO EXISTING SECONDARY WATER w/ CONSTRUCTION VALVE
P4	INSTALL TEE (DETAIL: PI-2)
P5	INSTALL CROSS (DETAIL: PI-2)
P6	STUB w/ VALVE & 2" BLOW-OFF (DETAIL PI-12B)
P7	INSTALL AIR/VAC RELEASE (DETAIL: PI-8A, PI-8B)
P8	INSTALL DOUBLE SECONDARY WATER SERVICE (TYP) (DETAIL: PI-3, PI-5B, PI-5C)
P9	INSTALL SINGLE SECONDARY WATER SERVICE (DETAIL: PI-3, PI-5A, PI-5C)
P10	SECONDARY WATER SERVICE TO COMMON SPACE (DETAIL: PRIVATE OPEN SPACE PI-6 / CITY OPEN SPACE PI-4) (SEE LANDSCAPE DRAWINGS FOR ADDITIONAL REQUIREMENTS)
P11	EXISTING DOUBLE SECONDARY WATER SERVICE (TYP)
S1	EXISTING SEWER
S2	INSTALL SDR-35 SEWER (DETAIL: SS-1, ST-7)
S3	CONNECT TO EXISTING SEWER MANHOLE
S4	INSTALL 4" SEWER LATERAL (TYP) (DETAIL: SS-3)
S5	EXISTING 4" SEWER LATERAL (TYP)
D1	EXISTING STORM DRAIN
D2	INSTALL RCP STORM DRAIN (DETAIL: SD-1, ST-7)
D3	CONNECT TO EXISTING STORM DRAIN
G1	EXISTING STREET LIGHT
G2	INSTALL STREET LIGHT (LOCAL) (DETAIL: LP-1A, LP-1B, LP-4, LP-6)
G3	INSTALL STREET LIGHT (PRIVATE ON PRIVATE METER)
G4	INSTALL STREET LIGHT (COLLECTOR) (DETAIL: LP-1, LP-2A, LP-2C, LP-5, LP-6)
G5	INSTALL DRIVE APPROACH RESIDENTIAL (DETAIL: ST-4A)
G6	INSTALL DRIVE APPROACH COMMERCIAL (DETAIL ST-4B)
G7	INSTALL NDCBU MAILBOX
G8	INSTALL IRRIGATION CONDUIT (SEE IRRIGATION PLANS)

LEI
- A Utah Corporation -
ENGINEERS
SURVEYORS
PLANNERS
3302 N. Main Street
Spanish Fork, UT 84660
Phone: 801.798.0555
Fax: 801.798.9393
office@lei-eng.com
www.lei-eng.com

STATE OF UTAH — GREGORY D. MAGLEBY — No. 189844 — REGISTERED PROFESSIONAL ENGINEER

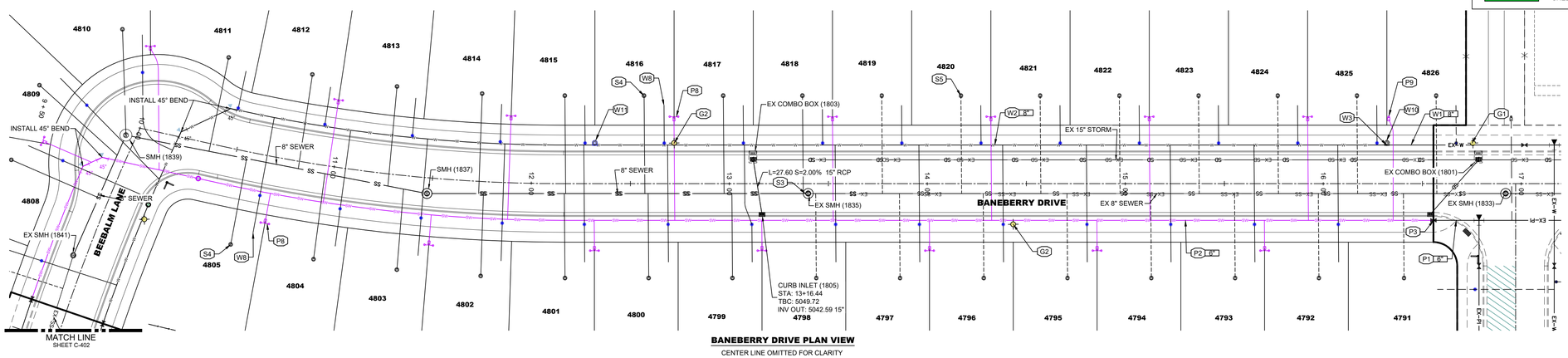

BANEBERRY DRIVE PLAN VIEW

CENTER LINE OMITTED FOR CLARITY

SCALE: 1"=30'

30 15 0 30

NOTE:
A RIGHT-OF-WAY ENCROACHMENT PERMIT MUST BE OBTAINED FROM THE CITY OF SARATOGA SPRINGS PRIOR TO DOING ANY WORK IN THE EXISTING RIGHT-OF-WAY.
APPLY FOR ENCROACHMENT PERMIT AT:
https://cityworks.saratogaspringscity.com/publicaccess/template/login.aspx

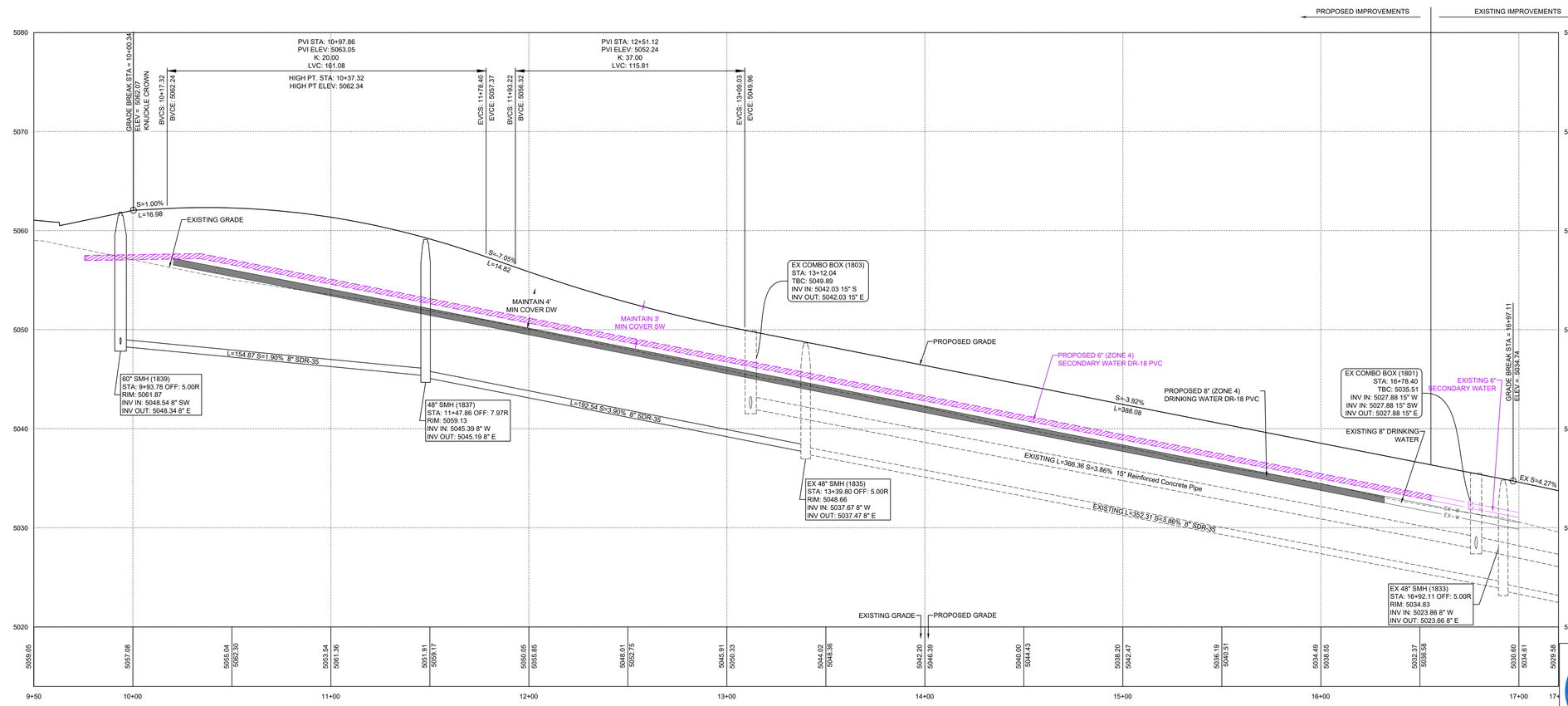

BANEBERRY DRIVE PROFILE VIEW

LEGEND

EXISTING	PROPOSED		DETAILS
		BOUNDARY LINE	
		STREET CENTERLINE	
		EASEMENT LINE	
		LOT LINES	
EX SS	SS	SEWER PIPE	SS-1, ST-7, (*2)
		SEWER MANHOLE	SS-2, SS-2A, (*2)
		4" SEWER CLEANOUT	SS-3, (*5)
EX SD	SD	STORM DRAIN PIPE (RCP)	SD-1, ST-7, (*2)
		STORM DRAIN MANHOLE	SS-2, (*2)
		CURB INLET	SD-2
		COMBO BOX	SD-5
		2'x2' YARD BOX	
		4'x4' CATCH BASIN	(*2)
		3'x3' CATCH BASIN	(*2)
		INLET/OUTLET W/ GRATE	SD-6
EX W	W	CULINARY WATER PIPE	DW-1, DW-2, DW-3, ST-7, (*2)
		45° PIPE ELBOW (W)	DW-2, DW-3, (*2)
		22.5° PIPE ELBOW (W)	DW-2, DW-3, (*2)
		11.25° PIPE ELBOW (W)	DW-2, DW-3, (*2)
		FIRE HYDRANT	DW-4
		3/4" SERVICE & METER (W)	DW-5
		PRV(W)	DW-10A, DW-10B, DW-10C, DW10-D, DW-10E
		AIR-VAC VALVE (W)	DW-12A, DW-12B, DW-15
		2" BLOW-OFF (W)	DW-13A, DW-15
		VALVE (W & SW)	(*1)(*2)
		TEE	DW-2, (*2)
		CROSS	DW-2, (*2)
EX SW	SW	SECONDARY WATER PIPE	PI-1, PI-2, ST-7, (*2)
		45° PIPE ELBOW (SW)	PI-2, (*2)
		22.5° PIPE ELBOW (SW)	PI-2, (*2)
		11.25° PIPE ELBOW (SW)	PI-2, (*2)
		1" SINGLE SW SERVICE	PI-3, PI-5A, PI-5C
		1-1/2" DUAL SW SERVICE	PI-3, PI-5B, PI-5C
		SW SERVICE TO PARKS	PI-4
		AIR-VAC VALVE (SW)	PI-8A, PI-8B, PI-13
		BACKFLOW PREVENTER	PI-11
		2" BLOW-OFF (SW)	PI-12A, PI-13
		30" C&G (COLLECTOR)	ST-1, ST-2A
		24" C&G (LOCAL)	ST-1, ST-2B
		24" SHED C&G	ST-1, ST-2D
		SIDEWALK	ST-1
		STOP SIGN	ST-28
		STREET SIGN	ST-28
		MONUMENT	ST-29
		SPRINKLER CONDUIT	ST-8, (*3)
		FENCE	LS-14, LS-15
		STREET LIGHT LOCAL	LP-1A, LP-1B, LP-4, LP-6
		STREET LIGHT COLLECTOR	LP-2A, LP-2B, LP-2C, LP-5, LP-6
		POWER POLE	
		DITCH	
EX FO		FIBER OPTIC	
EX GAS		GAS	
EX OHP	OHP	OVERHEAD POWER	
		FLOW ARROW	
		CONTOURS	
		100 YEAR FLOOD ROUTE	
		MATCH LINE	
		DRIVE APPROACH	ST-4, ST-4B
		ADA RAMP	ST-5A, ST-5B, ST-5C, ST-5D, ST-5E
		TRAIL	ST-15, (*4)

(*1)CULINARY & SECONDARY WATER LINES LESS THAN 12" TO BE GATE VALVES, LINES 12" & LARGER REQUIRE BUTTERFLY VALVES
(*2)SEE PLAN & PROFILE FOR SIZE & MATERIAL
(*3)SEE LANDSCAPE DESIGN FOR NUMBER OF CONDUITS & SIZES
(*4)SEE PLAN & PROFILE FOR WIDTH & DESIGN MATERIALS
(*5) SEWER SERVICE MINIMUM SLOPE 2%

WILDFLOWER - VILLAGE 9 - PLAT X-3

CITY OF SARATOGA SPRINGS, UTAH COUNTY, UTAH

BANEBERRY DRIVE PLAN & PROFILE - SECONDARY WATER

STA: 9+75 TO 17+00

REVISIONS
1 -
2 -
3 -
4 -
5 -

LEI PROJECT #: 2023-0055
DRAWN BY: BLS/MJV
CHECKED BY: GDM
SCALE: 1"=30' (PRINTED ON 24x36)
DATE: 12/23/2025
SHEET: C-403 SW

U:\LAND DESKTOP PROJECTS\13-0002 DW COLLINS BROTHERS\DWG\VILLAGE 2\VP PLAT X-3\23-0055 X-3 (403-404SW) BANEBERRY.DWG 12/23/2025 1:44 PM

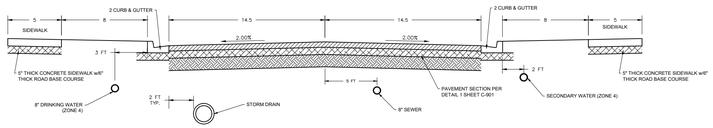

KEY MAP

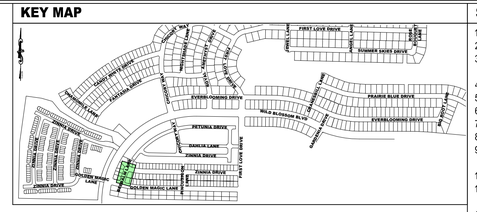

SHEET NOTES

1. CONTRACTOR TO VERIFY ALL EXISTING CONDITIONS AND LOCATION OF EXISTING UTILITIES PRIOR TO CONSTRUCTION.
2. ALL CULINARY & SECONDARY WATER PIPES TO BE DR-18 PVC.
3. ALL RESIDENTIAL CULINARY WATER METERS TO BE 3/4" DIAMETER. INSTALL POLY PAST THE METERS TO THE LOT SIDE OF THE SIDEWALK ON CULINARY LATERALS, SEE CITY DETAIL CW-5.
4. ALL RESIDENTIAL SECONDARY WATER METER TO BE 1" DIAMETER.
5. ALL CULINARY OR SECONDARY WATER VALVES 12" OR SMALLER TO BE GATE VALVES, VALVES LARGER TO BE BUTTERFLY VALVES.
6. MARKERS MUST BE PLACED AT ALL "OFFSITE" UTILITIES PER CITY STANDARD ST-27.
7. SEE GRADING AND DRAINAGE PLAN FOR GRADING REQUIREMENTS.
8. SEE SIGNAGE & STRIPING PLAN FOR SIGN LOCATIONS.
9. PUBLIC RESIDENTIAL ROADWAY 59 FOOT RIGHT-OF-WAY TO BE INSTALLED PER CITY DETAIL ST-8 (2021). RESIDENTIAL ROADWAY TO UTILIZE STREET PAVEMENT SECTION DETAIL 1 SHEET C-901.
10. CONTRACTOR TO CONFIRM DRIVEWAY LOCATIONS AND PROVIDE FLAT GRATE AS NECESSARY & IN COORDINATION WITH CITY INSPECTOR.
11. SHALLOW SEWER DEPTHS! CONTRACTOR SHALL VERIFY SEWER DEPTHS BEFORE EXCAVATING FOR BASEMENT. HOME(S) WITH BASEMENT MAY NOT HAVE SEWER SERVICE AVAILABLE FOR BASEMENT.
12. ALL STORM DRAIN FACILITIES WILL CONFORM TO THE CITY'S CONSTRUCTION STANDARDS & POLICIES.

LEGEND

- NON-STANDARD RIGHT-OF-WAY
- ROAD SUPER ELEVATION
- SHED CURB

KEYED NOTES

- W1 EXISTING DRINKING WATER
- W2 INSTALL DR-18 DRINKING WATER (DETAIL: DW-1, DW-2, DW-3, ST-7)
- W3 CONNECT TO EXISTING DRINKING WATER w/ CONSTRUCTION VALVE
- W4 INSTALL TEE (DETAIL: DW-2)
- W5 INSTALL CROSS (DETAIL: DW-2)
- W6 STUB w/ VALVE & 2" BLOW-OFF (OUTSIDE OF DRIVE AREA) (DETAIL: DW-13B)
- W7 INSTALL AIR/VAC RELEASE (DETAIL: DW-12A, DW-12B)
- W8 INSTALL 3/4" DRINKING WATER SERVICE (TYP) (DETAIL: DW-5)
- W9 INSTALL CLUSTER LOT MULTI UNIT DRINKING WATER SERVICE (DETAIL: CLUSTER LOT WATER METER DETAIL SH C-201, DW-5A)
- W10 EXISTING FIRE HYDRANT
- W11 INSTALL FIRE HYDRANT (TYP) (DETAIL: DW-4)
- W12 EXISTING 3/4" DRINKING WATER SERVICE (TYP)
- P1 EXISTING SECONDARY WATER
- P2 INSTALL DR-18 SECONDARY WATER (DETAIL: PI-1, PI-2, ST-7)
- P3 CONNECT TO EXISTING SECONDARY WATER w/ CONSTRUCTION VALVE
- P4 INSTALL TEE (DETAIL: PI-2)
- P5 INSTALL CROSS (DETAIL: PI-2)
- P6 STUB w/ VALVE & 2" BLOW-OFF (DETAIL PI-12B)
- P7 INSTALL AIR/VAC RELEASE (DETAIL: PI-8A, PI-8B)
- P8 INSTALL DOUBLE SECONDARY WATER SERVICE (TYP) (DETAIL: PI-3, PI-5B, PI-5C)
- P9 INSTALL SINGLE SECONDARY WATER SERVICE (DETAIL: PI-3, PI-5A, PI-5C)
- P10 SECONDARY WATER SERVICE TO COMMON SPACE (DETAIL: PRIVATE OPEN SPACE PI-6 / CITY OPEN SPACE PI-4) (SEE LANDSCAPE DRAWINGS FOR ADDITIONAL REQUIREMENTS)
- P11 EXISTING DOUBLE SECONDARY WATER SERVICE (TYP)
- S1 EXISTING SEWER
- S2 INSTALL SDR-35 SEWER (DETAIL: SS-1, ST-7)
- S3 CONNECT TO EXISTING SEWER MANHOLE
- S4 INSTALL 4" SEWER LATERAL (TYP) (DETAIL: SS-3)
- S5 EXISTING 4" SEWER LATERAL (TYP)
- D1 EXISTING STORM DRAIN
- D2 INSTALL RCP STORM DRAIN (DETAIL: SD-1, ST-7)
- D3 CONNECT TO EXISTING STORM DRAIN
- G1 EXISTING STREET LIGHT
- G2 INSTALL STREET LIGHT (LOCAL) (DETAIL: LP-1A, LP-1B, LP-4, LP-6)
- G3 INSTALL STREET LIGHT (PRIVATE ON PRIVATE METER)
- G4 INSTALL STREET LIGHT (COLLECTOR) (DETAIL: LP-1, LP-2A, LP-2C, LP-5, LP-6)
- G5 INSTALL DRIVE APPROACH RESIDENTIAL (DETAIL: ST-4A)
- G6 INSTALL DRIVE APPROACH COMMERCIAL (DETAIL ST-4B)
- G7 INSTALL NDCBU MAILBOX
- G8 INSTALL IRRIGATION CONDUIT (SEE IRRIGATION PLANS)

LEI
- A Utah Corporation -
ENGINEERS
SURVEYORS
PLANNERS
3302 N. Main Street
Spanish Fork, UT 84660
Phone: 801.798.0555
Fax: 801.798.9393
office@lei-eng.com
www.lei-eng.com

STATE OF UTAH
GREGORY D. MAGLEBY
No. 189844
REGISTERED
PROFESSIONAL ENGINEER

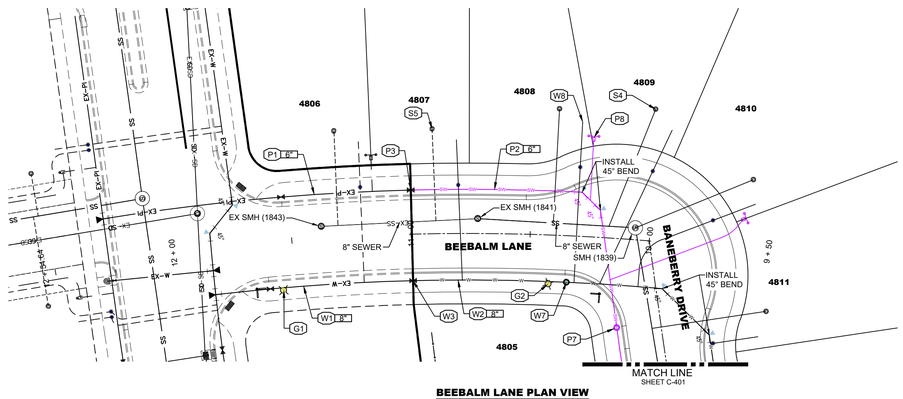

BEEBALM LANE PLAN VIEW

CENTER LINE OMITTED FOR CLARITY

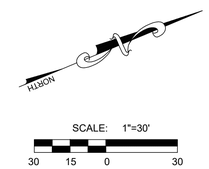

NOTE:
A RIGHT-OF-WAY ENCROACHMENT PERMIT MUST BE OBTAINED FROM THE CITY OF SARATOGA SPRINGS PRIOR TO DOING ANY WORK IN THE EXISTING RIGHT-OF-WAY.
APPLY FOR ENCROACHMENT PERMIT AT:
https://cityworks.saratogaspringscity.com/publicaccess/template/login.aspx

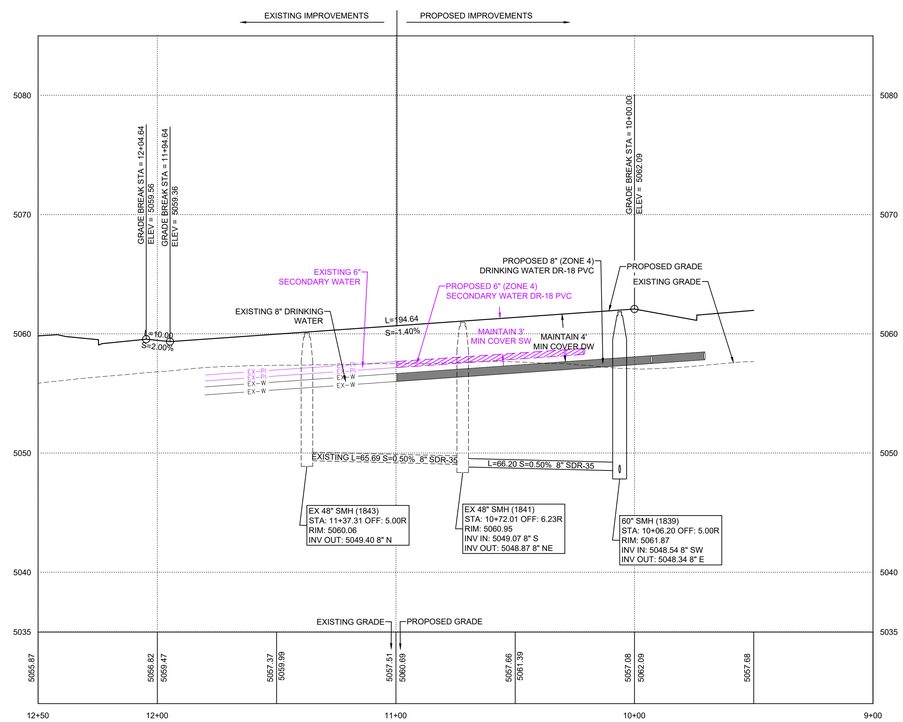

BEEBALM LANE PROFILE VIEW

LEGEND

EXISTING	PROPOSED		DETAILS
		BOUNDARY LINE	
		STREET CENTERLINE	
		EASEMENT LINE	
		LOT LINES	
EX SS	SS	SEWER PIPE	SS-1, ST-7, (*2)
		SEWER MANHOLE	SS-2, SS-2A, (*2)
		4" SEWER CLEANOUT	SS-3, (*5)
EX SD	SD	STORM DRAIN PIPE (RCP)	SD-1, ST-7, (*2)
		STORM DRAIN MANHOLE	SS-2, (*2)
		CURB INLET	SD-2
		COMBO BOX	SD-5
		2'x2' YARD BOX	
		4'x4' CATCH BASIN	(*2)
		3'x3' CATCH BASIN	(*2)
		INLET/OUTLET W/ GRATE	SD-6
EX W	W	CULINARY WATER PIPE	DW-1, DW-2, DW-3, ST-7, (*2)
		45° PIPE ELBOW (W)	DW-2, DW-3, (*2)
		22.5° PIPE ELBOW (W)	DW-2, DW-3, (*2)
		11.25° PIPE ELBOW (W)	DW-2, DW-3, (*2)
		FIRE HYDRANT	DW-4
		3/4" SERVICE & METER (W)	DW-5
		PRV(W)	DW-10A, DW-10B, DW-10C, DW10-D, DW-10E
		AIR-VAC VALVE (W)	DW-12A, DW-12B, DW-15
		2" BLOW-OFF (W)	DW-13A, DW-15
		VALVE (W & SW)	(*1)(*2)
		TEE	DW-2, (*2)
		CROSS	DW-2, (*2)
EX SW	SW	SECONDARY WATER PIPE	PI-1, PI-2, ST-7, (*2)
		45° PIPE ELBOW (SW)	PI-2, (*2)
		22.5° PIPE ELBOW (SW)	PI-2, (*2)
		11.25° PIPE ELBOW (SW)	PI-2, (*2)
		1" SINGLE SW SERVICE	PI-3, PI-5A, PI-5C
		1-1/2" DUAL SW SERVICE	PI-3, PI-5B, PI-5C
		SW SERVICE TO PARKS	PI-4
		AIR-VAC VALVE (SW)	PI-8A, PI-8B, PI-13
		BACKFLOW PREVENTER	PI-11
		2" BLOW-OFF (SW)	PI-12A, PI-13
		30" C&G (COLLECTOR)	ST-1, ST-2A
		24" C&G (LOCAL)	ST-1, ST-2B
		24" SHED C&G	ST-1, ST-2D
		SIDEWALK	ST-1
	STOP	STOP SIGN	ST-28
		STREET SIGN	ST-28
		MONUMENT	ST-29
		SPRINKLER CONDUIT	ST-8, (*3)
		FENCE	LS-14, LS-15
		STREET LIGHT LOCAL	LP-1A, LP-1B, LP-4, LP-6
		STREET LIGHT COLLECTOR	LP-2A, LP-2B, LP-2C, LP-5, LP-6
		POWER POLE	
		DITCH	
EX-FO		FIBER OPTIC	
EX-GAS		GAS	
EX-OHP	OHP	OVERHEAD POWER	
		FLOW ARROW	
		CONTOURS	
		100 YEAR FLOOD ROUTE	
		MATCH LINE	
		DRIVE APPROACH	ST-4, ST-4B
		ADA RAMP	ST-5A, ST-5B, ST-5C, ST-5D, ST-5E
		TRAIL	ST-15, (*4)

(*1)CULINARY & SECONDARY WATER LINES LESS THAN 12" TO BE GATE VALVES, LINES 12" & LARGER REQUIRE BUTTERFLY VALVES
(*2)SEE PLAN & PROFILE FOR SIZE & MATERIAL
(*3)SEE LANDSCAPE DESIGN FOR NUMBER OF CONDUITS & SIZES
(*4)SEE PLAN & PROFILE FOR WIDTH & DESIGN MATERIALS
(*5) SEWER SERVICE MINIMUM SLOPE 2%

CALL BEFORE YOU DIG
BLUE STAKES 1-800-662-4111

WILDFLOWER - VILLAGE 9 - PLAT X-3

CITY OF SARATOGA SPRINGS, UTAH COUNTY, UTAH

BEEBALM LANE PLAN & PROFILE - SECONDARY WATER

STA: 11+80 TO 9+50

REVISIONS
1 -
2 -
3 -
4 -
5 -

LEI PROJECT #: 2023-0055
DRAWN BY: BLS/MJV
CHECKED BY: GDM
SCALE: 1"=30' (PRINTED ON 24x36)
DATE: 12/23/2025
SHEET: C-404 SW

I:\LAND DESKTOP PROJECTS\13-0002 DJ COLLINS BROTHERS\DWG\VILLAGE 6\X9 PLAT X-3\23-0055 X-3 (403-404SW) BANEBERRY.DWG 12/23/2025 1:44 PM

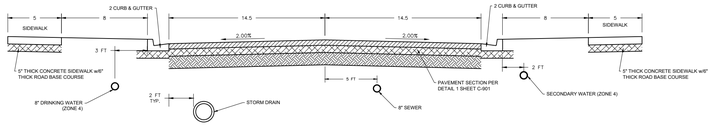

KEY MAP

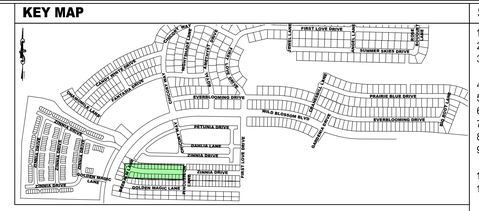

SHEET NOTES

1. CONTRACTOR TO VERIFY ALL EXISTING CONDITIONS AND LOCATION OF EXISTING UTILITIES PRIOR TO CONSTRUCTION.
2. ALL CULINARY & SECONDARY WATER PIPES TO BE DR-18 PVC.
3. ALL RESIDENTIAL CULINARY WATER METERS TO BE 3/4" DIAMETER. INSTALL POLY PAST THE METERS TO THE LOT SIDE OF THE SIDEWALK ON CULINARY LATERALS, SEE CITY DETAIL CW-5.
4. ALL RESIDENTIAL SECONDARY WATER METER TO BE 1" DIAMETER.
5. ALL CULINARY OR SECONDARY WATER VALVES 12" OR SMALLER TO BE GATE VALVES, VALVES LARGER TO BE BUTTERFLY VALVES.
6. MARKERS MUST BE PLACED AT ALL "OFFSITE" UTILITIES PER CITY STANDARD ST-27.
7. SEE GRADING AND DRAINAGE PLAN FOR GRADING REQUIREMENTS.
8. SEE SIGNAGE & STRIPING PLAN FOR SIGN LOCATIONS.
9. PUBLIC RESIDENTIAL ROADWAY 59 FOOT RIGHT-OF-WAY TO BE INSTALLED PER CITY DETAIL ST-8 (2021). RESIDENTIAL ROADWAY TO UTILIZE STREET PAVEMENT SECTION DETAIL 1 SHEET C-901.
10. CONTRACTOR TO CONFIRM DRIVEWAY LOCATIONS AND PROVIDE FLAT GRATE AS NECESSARY & IN COORDINATION WITH CITY INSPECTOR.
11. SHALLOW SEWER DEPTHS! CONTRACTOR SHALL VERIFY SEWER DEPTHS BEFORE EXCAVATING FOR BASEMENT. HOME(S) WITH BASEMENT MAY NOT HAVE SEWER SERVICE AVAILABLE FOR BASEMENT.
12. ALL STORM DRAIN FACILITIES WILL CONFORM TO THE CITY'S CONSTRUCTION STANDARDS & POLICIES.

LEGEND

- NON-STANDARD RIGHT-OF-WAY
- ROAD SUPER ELEVATION
- SHED CURB

KEYED NOTES

W1	EXISTING DRINKING WATER
W2	INSTALL DR-18 DRINKING WATER (DETAIL: DW-1, DW-2, DW-3, ST-7)
W3	CONNECT TO EXISTING DRINKING WATER w/ CONSTRUCTION VALVE
W4	INSTALL TEE (DETAIL: DW-2)
W5	INSTALL CROSS (DETAIL: DW-2)
W6	STUB w/ VALVE & 2" BLOW-OFF (OUTSIDE OF DRIVE AREA) (DETAIL: DW-13B)
W7	INSTALL AIR/VAC RELEASE (DETAIL: DW-12A, DW-12B)
W8	INSTALL 3/4" DRINKING WATER SERVICE (TYP) (DETAIL: DW-5)
W9	INSTALL CLUSTER LOT MULTI UNIT DRINKING WATER SERVICE (DETAIL: CLUSTER LOT WATER METER DETAIL SH C-201, DW-5A)
W10	EXISTING FIRE HYDRANT
W11	INSTALL FIRE HYDRANT (TYP) (DETAIL: DW-4)
W12	EXISTING 3/4" DRINKING WATER SERVICE (TYP)
P1	EXISTING SECONDARY WATER
P2	INSTALL DR-18 SECONDARY WATER (DETAIL: PI-1, PI-2, ST-7)
P3	CONNECT TO EXISTING SECONDARY WATER w/ CONSTRUCTION VALVE
P4	INSTALL TEE (DETAIL: PI-2)
P5	INSTALL CROSS (DETAIL: PI-2)
P6	STUB w/ VALVE & 2" BLOW-OFF (DETAIL PI-12B)
P7	INSTALL AIR/VAC RELEASE (DETAIL: PI-8A, PI-8B)
P8	INSTALL DOUBLE SECONDARY WATER SERVICE (TYP) (DETAIL: PI-3, PI-5B, PI-5C)
P9	INSTALL SINGLE SECONDARY WATER SERVICE (DETAIL: PI-3, PI-5A, PI-5C)
P10	SECONDARY WATER SERVICE TO COMMON SPACE (DETAIL: PRIVATE OPEN SPACE PI-6 / CITY OPEN SPACE PI-4) (SEE LANDSCAPE DRAWINGS FOR ADDITIONAL REQUIREMENTS)
P11	EXISTING DOUBLE SECONDARY WATER SERVICE (TYP)
S1	EXISTING SEWER
S2	INSTALL SDR-35 SEWER (DETAIL: SS-1, ST-7)
S3	CONNECT TO EXISTING SEWER MANHOLE
S4	INSTALL 4" SEWER LATERAL (TYP) (DETAIL: SS-3)
S5	EXISTING 4" SEWER LATERAL (TYP)
D1	EXISTING STORM DRAIN
D2	INSTALL RCP STORM DRAIN (DETAIL: SD-1, ST-7)
D3	CONNECT TO EXISTING STORM DRAIN
G1	EXISTING STREET LIGHT
G2	INSTALL STREET LIGHT (LOCAL) (DETAIL: LP-1A, LP-1B, LP-4, LP-6)
G3	INSTALL STREET LIGHT (PRIVATE ON PRIVATE METER)
G4	INSTALL STREET LIGHT (COLLECTOR) (DETAIL: LP-1, LP-2A, LP-2C, LP-5, LP-6)
G5	INSTALL DRIVE APPROACH RESIDENTIAL (DETAIL: ST-4A)
G6	INSTALL DRIVE APPROACH COMMERCIAL (DETAIL ST-4B)
G7	INSTALL NDCBU MAILBOX
G8	INSTALL IRRIGATION CONDUIT (SEE IRRIGATION PLANS)

LEI
- A Utah Corporation -
ENGINEERS
SURVEYORS
PLANNERS
3302 N. Main Street
Spanish Fork, UT 84660
Phone: 801.798.0555
Fax: 801.798.9393
office@lei-eng.com
www.lei-eng.com

STATE OF UTAH
GREGORY D. MAGLEBY
No. 189844
REGISTERED
PROFESSIONAL ENGINEER

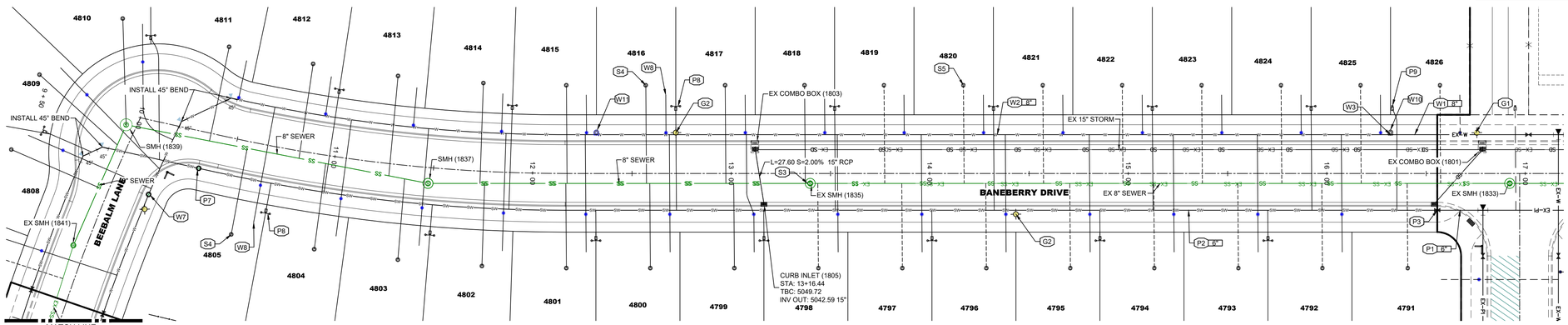

BANEBERRY DRIVE PLAN VIEW

CENTER LINE OMITTED FOR CLARITY

NOTE:
A RIGHT-OF-WAY ENCROACHMENT PERMIT MUST BE OBTAINED FROM THE CITY OF SARATOGA SPRINGS PRIOR TO DOING ANY WORK IN THE EXISTING RIGHT-OF-WAY. APPLY FOR ENCROACHMENT PERMIT AT: https://cityworks.saratogaspringscity.com/publicaccess/template/login.aspx

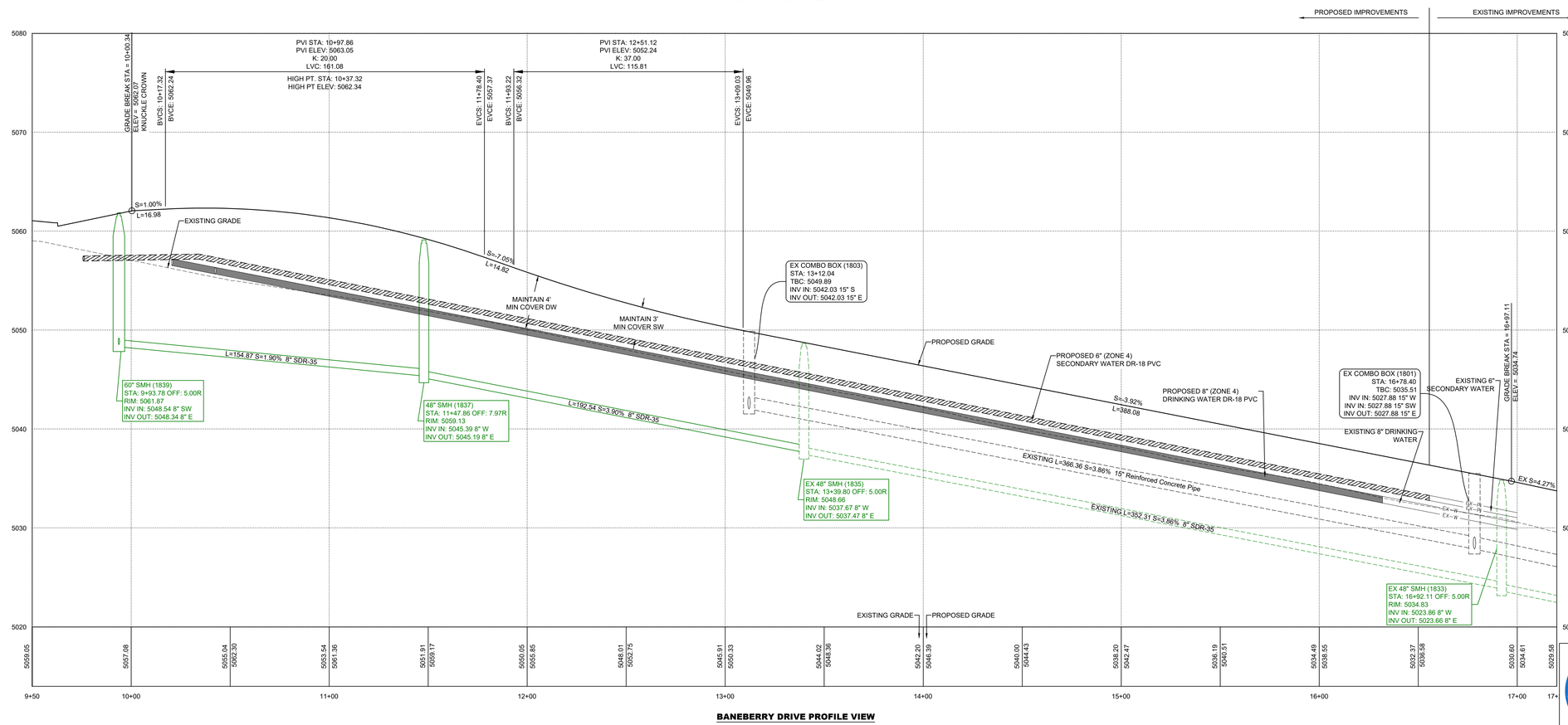

BANEBERRY DRIVE PROFILE VIEW

LEGEND

EXISTING	PROPOSED		DETAILS
		BOUNDARY LINE	
		STREET CENTERLINE	
		EASEMENT LINE	
		LOT LINES	
EX SS	SS	SEWER PIPE	SS-1, ST-7, (*2)
		SEWER MANHOLE	SS-2, SS-2A, (*2)
		4" SEWER CLEANOUT	SS-3, (*5)
EX SD	SD	STORM DRAIN PIPE (RCP)	SD-1, ST-7, (*2)
		STORM DRAIN MANHOLE	SS-2, (*2)
		CURB INLET	SD-2
		COMBO BOX	SD-5
		2'x2' YARD BOX	
		4'x4' CATCH BASIN	(*2)
		3'x3' CATCH BASIN	(*2)
		INLET/OUTLET W/ GRATE	SD-6
EX W	W	CULINARY WATER PIPE	DW-1, DW-2, DW-3, ST-7, (*2)
		45° PIPE ELBOW (W)	DW-2, DW-3, (*2)
		22.5° PIPE ELBOW (W)	DW-2, DW-3, (*2)
		11.25° PIPE ELBOW (W)	DW-2, DW-3, (*2)
		FIRE HYDRANT	DW-4
		3/4" SERVICE & METER (W)	DW-5
		PRV(W)	DW-10A, DW-10B, DW-10C, DW10-D, DW-10E
		AIR-VAC VALVE (W)	DW-12A, DW-12B, DW-15
		2" BLOW-OFF (W)	DW-13A, DW-15
		VALVE (W & SW)	(*1)(*2)
		TEE	DW-2, (*2)
		CROSS	DW-2, (*2)
EX SW	SW	SECONDARY WATER PIPE	PI-1, PI-2, ST-7, (*2)
		45° PIPE ELBOW (SW)	PI-2, (*2)
		22.5° PIPE ELBOW (SW)	PI-2, (*2)
		11.25° PIPE ELBOW (SW)	PI-2, (*2)
		1" SINGLE SW SERVICE	PI-3, PI-5A, PI-5C
		1-1/2" DUAL SW SERVICE	PI-3, PI-5B, PI-5C
		SW SERVICE TO PARKS	PI-4
		AIR-VAC VALVE (SW)	PI-8A, PI-B, PI-13
		BACKFLOW PREVENTER	PI-11
		2" BLOW-OFF (SW)	PI-12A, PI-13
		30" C&G (COLLECTOR)	ST-1, ST-2A
		24" C&G (LOCAL)	ST-1, ST-2B
		24" SHED C&G	ST-1, ST-2D
		SIDEWALK	ST-1
		STOP SIGN	ST-28
		STREET SIGN	ST-28
		MONUMENT	ST-29
		SPRINKLER CONDUIT	ST-8, (*3)
		FENCE	LS-14, LS-15
		STREET LIGHT LOCAL	LP-1A, LP-1B, LP-4, LP-6
		STREET LIGHT COLLECTOR	LP-2A, LP-2B, LP-2C, LP-5, LP-6
		POWER POLE	
		DITCH	
EX FO		FIBER OPTIC	
EX GAS		GAS	
EX OHP	OHP	OVERHEAD POWER	
		FLOW ARROW	
		CONTOURS	
		100 YEAR FLOOD ROUTE	
		MATCH LINE	
		DRIVE APPROACH	ST-4, ST-4B
		ADA RAMP	ST-5A, ST-5B, ST-5C, ST-5D, ST-5E
		TRAIL	ST-15, (*4)

(*1)CULINARY & SECONDARY WATER LINES LESS THAN 12" TO BE GATE VALVES, LINES 12" & LARGER REQUIRE BUTTERFLY VALVES
(*2)SEE PLAN & PROFILE FOR SIZE & MATERIAL
(*3)SEE LANDSCAPE DESIGN FOR NUMBER OF CONDUITS & SIZES
(*4)SEE PLAN & PROFILE FOR WIDTH & DESIGN MATERIALS
(*5) SEWER SERVICE MINIMUM SLOPE 2%

CALL BEFORE YOU DIG
BLUE STAKES 1-800-662-4111

WILDFLOWER - VILLAGE 9 - PLAT X-3

CITY OF SARATOGA SPRINGS, UTAH COUNTY, UTAH

BANEBERRY DRIVE PLAN & PROFILE - SEWER

STA: 9+75 TO 17+00

REVISIONS
1 -
2 -
3 -
4 -
5 -

LEI PROJECT #: 2023-0055
DRAWN BY: BLS/MJV
CHECKED BY: GDM
SCALE: 1"=30' (PRINTED ON 24x36)
DATE: 12/23/2025
SHEET: C-405 SS

U:\CAD DESKTOP PROJECTS\13-0902 DAI COLLINS BROTHERS\DWG\VILLAGE 9\V9 PLAT X-3\23-0055 X-3 (405-405S) BANEBERY.DWG 12/23/2025 2:24 PM

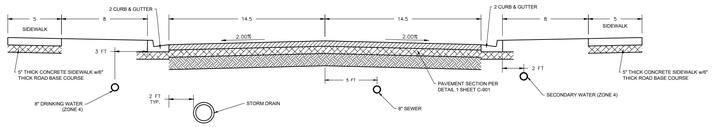

KEY MAP

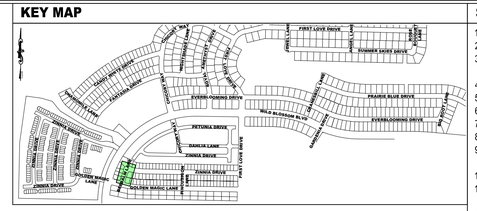

SHEET NOTES

1. CONTRACTOR TO VERIFY ALL EXISTING CONDITIONS AND LOCATION OF EXISTING UTILITIES PRIOR TO CONSTRUCTION.
2. ALL CULINARY & SECONDARY WATER PIPES TO BE DR-18 PVC.
3. ALL RESIDENTIAL CULINARY WATER METERS TO BE 3/4" DIAMETER. INSTALL POLY PAST THE METERS TO THE LOT SIDE OF THE SIDEWALK ON CULINARY LATERALS, SEE CITY DETAIL CW-5.
4. ALL RESIDENTIAL SECONDARY WATER METER TO BE 1" DIAMETER.
5. ALL CULINARY OR SECONDARY WATER VALVES 12" OR SMALLER TO BE GATE VALVES, VALVES LARGER TO BE BUTTERFLY VALVES.
6. MARKERS MUST BE PLACED AT ALL "OFFSITE" UTILITIES PER CITY STANDARD ST-27.
7. SEE GRADING AND DRAINAGE PLAN FOR GRADING REQUIREMENTS.
8. SEE SIGNAGE & STRIPING PLAN FOR SIGN LOCATIONS.
9. PUBLIC RESIDENTIAL ROADWAY 59 FOOT RIGHT-OF-WAY TO BE INSTALLED PER CITY DETAIL ST-8 (2021). RESIDENTIAL ROADWAY TO UTILIZE STREET PAVEMENT SECTION DETAIL 1 SHEET C-901.
10. CONTRACTOR TO CONFIRM DRIVEWAY LOCATIONS AND PROVIDE FLAT GRATE AS NECESSARY & IN COORDINATION WITH CITY INSPECTOR.
11. SHALLOW SEWER DEPTHS! CONTRACTOR SHALL VERIFY SEWER DEPTHS BEFORE EXCAVATING FOR BASEMENT. HOME(S) WITH BASEMENT MAY NOT HAVE SEWER SERVICE AVAILABLE FOR BASEMENT.
12. ALL STORM DRAIN FACILITIES WILL CONFORM TO THE CITY'S CONSTRUCTION STANDARDS & POLICIES.

LEGEND

- NON-STANDARD RIGHT-OF-WAY
- ROAD SUPER ELEVATION
- SHED CURB

KEYED NOTES

- W1 EXISTING DRINKING WATER
- W2 INSTALL DR-18 DRINKING WATER (DETAIL: DW-1, DW-2, DW-3, ST-7)
- W3 CONNECT TO EXISTING DRINKING WATER w/ CONSTRUCTION VALVE
- W4 INSTALL TEE (DETAIL: DW-2)
- W5 INSTALL CROSS (DETAIL: DW-2)
- W6 STUB w/ VALVE & 2" BLOW-OFF (OUTSIDE OF DRIVE AREA) (DETAIL: DW-13B)
- W7 INSTALL AIR/VAC RELEASE (DETAIL: DW-12A, DW-12B)
- W8 INSTALL 3/4" DRINKING WATER SERVICE (TYP) (DETAIL: DW-5)
- W9 INSTALL CLUSTER LOT MULTI UNIT DRINKING WATER SERVICE (DETAIL: CLUSTER LOT WATER METER DETAIL SH C-201, DW-5A)
- W10 EXISTING FIRE HYDRANT
- W11 INSTALL FIRE HYDRANT (TYP) (DETAIL: DW-4)
- W12 EXISTING 3/4" DRINKING WATER SERVICE (TYP)
- P1 EXISTING SECONDARY WATER
- P2 INSTALL DR-18 SECONDARY WATER (DETAIL: PI-1, PI-2, ST-7)
- P3 CONNECT TO EXISTING SECONDARY WATER w/ CONSTRUCTION VALVE
- P4 INSTALL TEE (DETAIL: PI-2)
- P5 INSTALL CROSS (DETAIL: PI-2)
- P6 STUB w/ VALVE & 2" BLOW-OFF (DETAIL PI-12B)
- P7 INSTALL AIR/VAC RELEASE (DETAIL: PI-8A, PI-8B)
- P8 INSTALL DOUBLE SECONDARY WATER SERVICE (TYP) (DETAIL: PI-3, PI-5B, PI-5C)
- P9 INSTALL SINGLE SECONDARY WATER SERVICE (DETAIL: PI-3, PI-5A, PI-5C)
- P10 SECONDARY WATER SERVICE TO COMMON SPACE (DETAIL: PRIVATE OPEN SPACE PI-6 / CITY OPEN SPACE PI-4) (SEE LANDSCAPE DRAWINGS FOR ADDITIONAL REQUIREMENTS)
- P11 EXISTING DOUBLE SECONDARY WATER SERVICE (TYP)
- S1 EXISTING SEWER
- S2 INSTALL SDR-35 SEWER (DETAIL: SS-1, ST-7)
- S3 CONNECT TO EXISTING SEWER MANHOLE
- S4 INSTALL 4" SEWER LATERAL (TYP) (DETAIL: SS-3)
- S5 EXISTING 4" SEWER LATERAL (TYP)
- D1 EXISTING STORM DRAIN
- D2 INSTALL RCP STORM DRAIN (DETAIL: SD-1, ST-7)
- D3 CONNECT TO EXISTING STORM DRAIN
- G1 EXISTING STREET LIGHT
- G2 INSTALL STREET LIGHT (LOCAL) (DETAIL: LP-1A, LP-1B, LP-4, LP-6)
- G3 INSTALL STREET LIGHT (PRIVATE ON PRIVATE METER)
- G4 INSTALL STREET LIGHT (COLLECTOR) (DETAIL: LP-1, LP-2A, LP-2C, LP-5, LP-6)
- G5 INSTALL DRIVE APPROACH RESIDENTIAL (DETAIL: ST-4A)
- G6 INSTALL DRIVE APPROACH COMMERCIAL (DETAIL ST-4B)
- G7 INSTALL NDCBU MAILBOX
- G8 INSTALL IRRIGATION CONDUIT (SEE IRRIGATION PLANS)

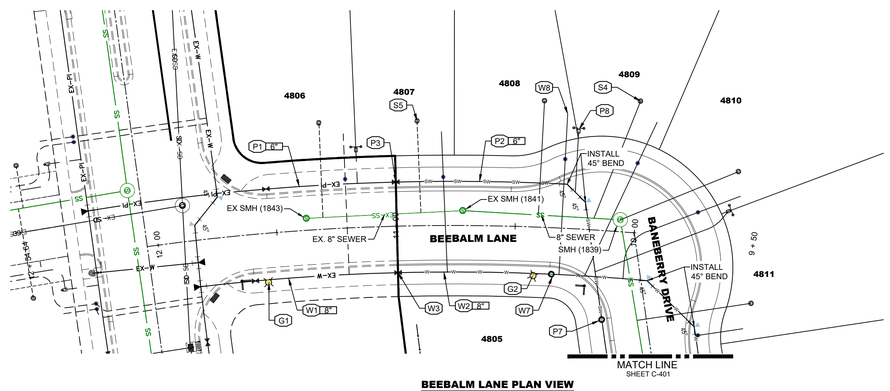

BEEBALM LANE PLAN VIEW

CENTER LINE OMITTED FOR CLARITY

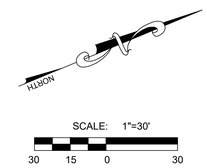

NOTE:
A RIGHT-OF-WAY ENCROACHMENT PERMIT MUST BE OBTAINED FROM THE CITY OF SARATOGA SPRINGS PRIOR TO DOING ANY WORK IN THE EXISTING RIGHT-OF-WAY.
APPLY FOR ENCROACHMENT PERMIT AT:
https://cityworks.saratogaspringscity.com/publicaccess/template/login.aspx

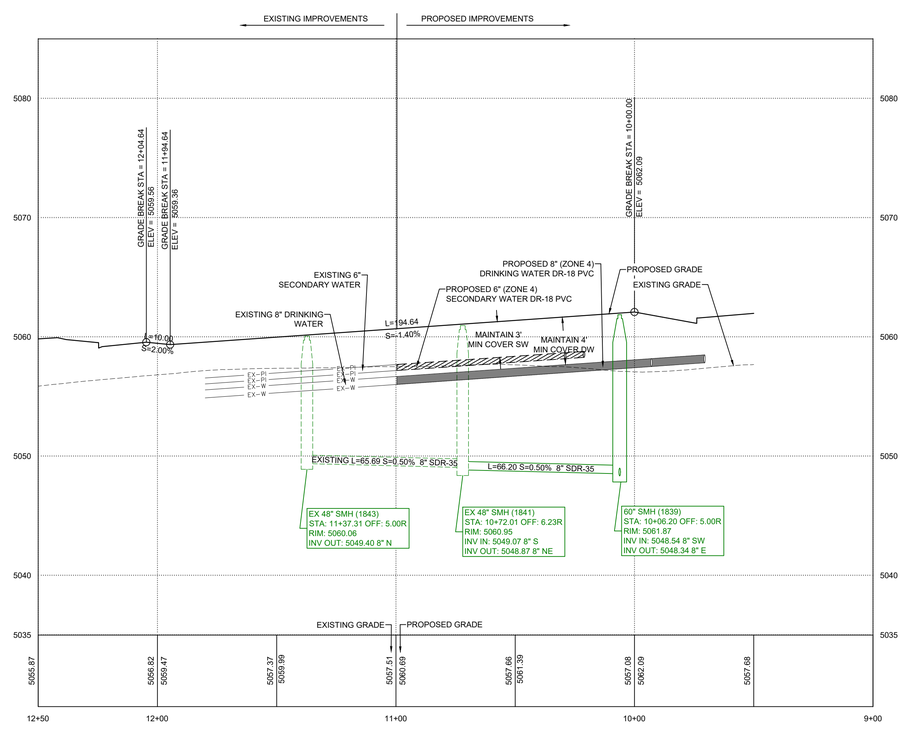

BEEBALM LANE PROFILE VIEW

LEGEND

EXISTING	PROPOSED		DETAILS
		BOUNDARY LINE	
		STREET CENTERLINE	
		EASEMENT LINE	
		LOT LINES	
EX SS	SS	SEWER PIPE	SS-1, ST-7, (*2)
		SEWER MANHOLE	SS-2, SS-2A, (*2)
		4" SEWER CLEANOUT	SS-3, (*5)
EX SD	SD	STORM DRAIN PIPE (RCP)	SD-1, ST-7, (*2)
		STORM DRAIN MANHOLE	SS-2, (*2)
		CURB INLET	SD-2
		COMBO BOX	SD-5
		2'x2' YARD BOX	
		4'x4' CATCH BASIN	(*2)
		3'x3' CATCH BASIN	(*2)
		INLET/OUTLET W/ GRATE	SD-6
EX W	W	CULINARY WATER PIPE	DW-1, DW-2, DW-3, ST-7, (*2)
		45° PIPE ELBOW (W)	DW-2, DW-3, (*2)
		22.5° PIPE ELBOW (W)	DW-2, DW-3, (*2)
		11.25° PIPE ELBOW (W)	DW-2, DW-3, (*2)
		FIRE HYDRANT	DW-4
		3/4" SERVICE & METER (W)	DW-5
		PRV (W)	DW-10A, DW-10B, DW-10C, DW10-D, DW-10E
		AIR-VAC VALVE (W)	DW-12A, DW-12B, DW-15
		2" BLOW-OFF (W)	DW-13A, DW-15
		VALVE (W & SW)	(*1)(*2)
		TEE	DW-2, (*2)
		CROSS	DW-2, (*2)
EX SW	SW	SECONDARY WATER PIPE	PI-1, PI-2, ST-7, (*2)
		45° PIPE ELBOW (SW)	PI-2, (*2)
		22.5° PIPE ELBOW (SW)	PI-2, (*2)
		11.25° PIPE ELBOW (SW)	PI-2, (*2)
		1" SINGLE SW SERVICE	PI-3, PI-5A, PI-5C
		1-1/2" DUAL SW SERVICE	PI-3, PI-5B, PI-5C
		SW SERVICE TO PARKS	PI-4
		AIR-VAC VALVE (SW)	PI-8A, PI-B, PI-13
		BACKFLOW PREVENTER	PI-11
		2" BLOW-OFF (SW)	PI-12A, PI-13
		30" C&G (COLLECTOR)	ST-1, ST-2A
		24" C&G (LOCAL)	ST-1, ST-2B
		24" SHED C&G	ST-1, ST-2D
		SIDEWALK	ST-1
		STOP SIGN	ST-28
		STREET SIGN	ST-28
		MONUMENT	ST-29
		SPRINKLER CONDUIT	ST-8, (*3)
		FENCE	LS-14, LS-15
		STREET LIGHT LOCAL	LP-1A, LP-1B, LP-4, LP-6
		STREET LIGHT COLLECTOR	LP-2A, LP-2B, LP-2C, LP-5, LP-6
		POWER POLE	
		DITCH	
EX FO		FIBER OPTIC	
EX GAS		GAS	
EX OHP	OHP	OVERHEAD POWER	
		FLOW ARROW	
		CONTOURS	
		100 YEAR FLOOD ROUTE	
		MATCH LINE	
		DRIVE APPROACH	ST-4, ST-4B
		ADA RAMP	ST-5A, ST-5B, ST-5C, ST-5D, ST-5E
		TRAIL	ST-15, (*4)

(*1)CULINARY & SECONDARY WATER LINES LESS THAN 12" TO BE GATE VALVES, LINES 12" & LARGER REQUIRE BUTTERFLY VALVES
(*2)SEE PLAN & PROFILE FOR SIZE & MATERIAL
(*3)SEE LANDSCAPE DESIGN FOR NUMBER OF CONDUITS & SIZES
(*4)SEE PLAN & PROFILE FOR WIDTH & DESIGN MATERIALS
(*5) SEWER SERVICE MINIMUM SLOPE 2%

CALL BEFORE YOU DIG. BLUE STAKES 1-800-662-4111

LEI
- A Utah Corporation -
ENGINEERS
SURVEYORS
PLANNERS
3302 N. Main Street
Spanish Fork, UT 84660
Phone: 801.798.0555
Fax: 801.798.9393
office@lei-eng.com
www.lei-eng.com

STATE OF UTAH
GREGORY D. MAGLEBY
No. 189844
REGISTERED
PROFESSIONAL ENGINEER

WILDFLOWER - VILLAGE 9 - PLAT X-3

CITY OF SARATOGA SPRINGS, UTAH COUNTY, UTAH

BEEBALM LANE PLAN & PROFILE - SEWER
STA: 11+80 TO 9+50

REVISIONS
1 -
2 -
3 -
4 -
5 -

LEI PROJECT #: 2023-0055
DRAWN BY: BLS/MJV
CHECKED BY: GDM
SCALE: 1"=30' (PRINTED ON 24x36)
DATE: 12/23/2025
SHEET C-406 SS

U:\LAND DESKTOP PROJECTS\13-0002 DA COLLINS BROTHERS\DWG\VILLAGE 9\VP PLAT X-3\23-0055 X-3 (405-406S) BANEBERRY.DWG 12/23/2025 2:04 PM

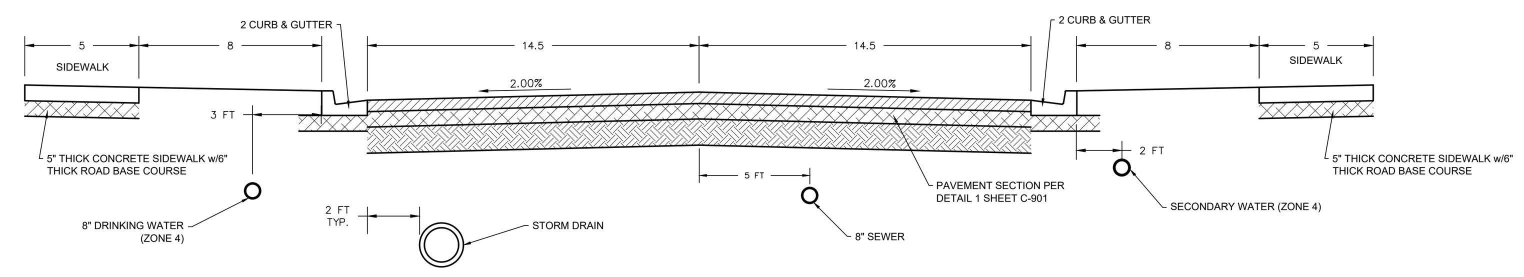

KEY MAP

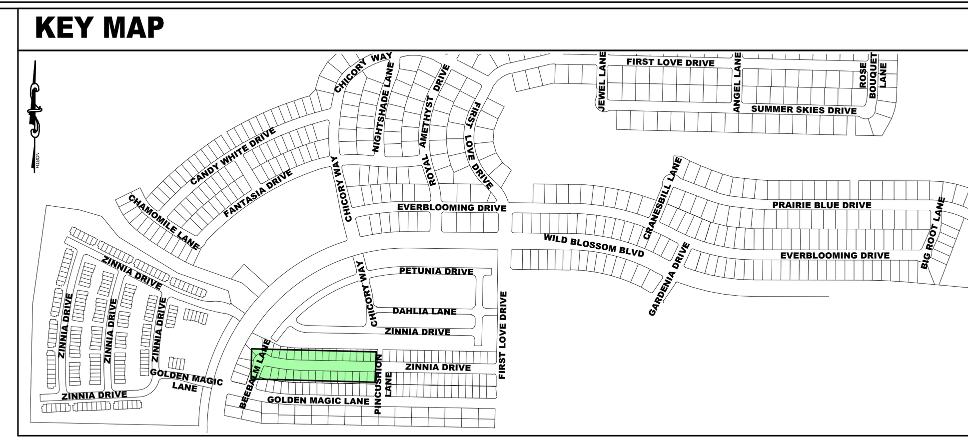

SHEET NOTES

1. CONTRACTOR TO VERIFY ALL EXISTING CONDITIONS AND LOCATION OF EXISTING UTILITIES PRIOR TO CONSTRUCTION.
2. ALL CULINARY & SECONDARY WATER PIPES TO BE DR-18 PVC.
3. ALL RESIDENTIAL CULINARY WATER METERS TO BE 3/4" DIAMETER. INSTALL POLY PAST THE METERS TO THE LOT SIDE OF THE SIDEWALK ON CULINARY LATERALS, SEE CITY DETAIL CW-5.
4. ALL RESIDENTIAL SECONDARY WATER METER TO BE 1" DIAMETER.
5. ALL CULINARY OR SECONDARY WATER VALVES 12" OR SMALLER TO BE GATE VALVES, VALVES LARGER TO BE BUTTERFLY VALVES.
6. MARKERS MUST BE PLACED AT ALL "OFFSITE" UTILITIES PER CITY STANDARD ST-27.
7. SEE GRADING AND DRAINAGE PLAN FOR GRADING REQUIREMENTS.
8. SEE SIGNAGE & STRIPING PLAN FOR SIGN LOCATIONS.
9. PUBLIC RESIDENTIAL ROADWAY 59 FOOT RIGHT-OF-WAY TO BE INSTALLED PER CITY DETAIL ST-8 (2021). RESIDENTIAL ROADWAY TO UTILIZE STREET PAVEMENT SECTION DETAIL 1 SHEET C-901.
10. CONTRACTOR TO CONFIRM DRIVEWAY LOCATIONS AND PROVIDE FLAT GRATE AS NECESSARY & IN COORDINATION WITH CITY INSPECTOR.
11. SHALLOW SEWER DEPTHS! CONTRACTOR SHALL VERIFY SEWER DEPTHS BEFORE EXCAVATING FOR BASEMENT. HOME(S) WITH BASEMENT MAY NOT HAVE SEWER SERVICE AVAILABLE FOR BASEMENT.
12. ALL STORM DRAIN FACILITIES WILL CONFORM TO THE CITY'S CONSTRUCTION STANDARDS & POLICIES.

LEGEND

- NON-STANDARD RIGHT-OF-WAY
- ROAD SUPER ELEVATION
- SHED CURB

KEYED NOTES

- W1 EXISTING DRINKING WATER
- W2 INSTALL DR-18 DRINKING WATER (DETAIL: DW-1, DW-2, DW-3, ST-7)
- W3 CONNECT TO EXISTING DRINKING WATER w/ CONSTRUCTION VALVE
- W4 INSTALL TEE (DETAIL: DW-2)
- W5 INSTALL CROSS (DETAIL: DW-2)
- W6 STUB w/ VALVE & 2" BLOW-OFF (OUTSIDE OF DRIVE AREA) (DETAIL: DW-13B)
- W7 INSTALL AIR/VAC RELEASE (DETAIL: DW-12A, DW-12B)
- W8 INSTALL 3/4" DRINKING WATER SERVICE (TYP) (DETAIL: DW-5)
- W9 INSTALL CLUSTER LOT MULTI UNIT DRINKING WATER SERVICE (DETAIL: CLUSTER LOT WATER METER DETAIL SH C-201, DW-5A)
- W10 EXISTING FIRE HYDRANT
- W11 INSTALL FIRE HYDRANT (TYP) (DETAIL: DW-4)
- W12 EXISTING 3/4" DRINKING WATER SERVICE (TYP)
- P1 EXISTING SECONDARY WATER
- P2 INSTALL DR-18 SECONDARY WATER (DETAIL: PI-1, PI-2, ST-7)
- P3 CONNECT TO EXISTING SECONDARY WATER w/ CONSTRUCTION VALVE
- P4 INSTALL TEE (DETAIL: PI-2)
- P5 INSTALL CROSS (DETAIL: PI-2)
- P6 STUB w/ VALVE & 2" BLOW-OFF (DETAIL PI-12B)
- P7 INSTALL AIR/VAC RELEASE (DETAIL: PI-8A, PI-8B)
- P8 INSTALL DOUBLE SECONDARY WATER SERVICE (TYP) (DETAIL: PI-3, PI-5B, PI-5C)
- P9 INSTALL SINGLE SECONDARY WATER SERVICE (DETAIL: PI-3, PI-5A, PI-5C)
- P10 SECONDARY WATER SERVICE TO COMMON SPACE (DETAIL: PRIVATE OPEN SPACE PI-6 / CITY OPEN SPACE PI-4) (SEE LANDSCAPE DRAWINGS FOR ADDITIONAL REQUIREMENTS)
- P11 EXISTING DOUBLE SECONDARY WATER SERVICE (TYP)
- S1 EXISTING SEWER
- S2 INSTALL SDR-35 SEWER (DETAIL: SS-1, ST-7)
- S3 CONNECT TO EXISTING SEWER MANHOLE
- S4 INSTALL 4" SEWER LATERAL (TYP) (DETAIL: SS-3)
- S5 EXISTING 4" SEWER LATERAL (TYP)
- D1 EXISTING STORM DRAIN
- D2 INSTALL RCP STORM DRAIN (DETAIL: SD-1, ST-7)
- D3 CONNECT TO EXISTING STORM DRAIN
- G1 EXISTING STREET LIGHT
- G2 INSTALL STREET LIGHT (LOCAL) (DETAIL: LP-1A, LP-1B, LP-4, LP-6)
- G3 INSTALL STREET LIGHT (PRIVATE ON PRIVATE METER)
- G4 INSTALL STREET LIGHT (COLLECTOR) (DETAIL: LP-1, LP-2A, LP-2C, LP-5, LP-6)
- G5 INSTALL DRIVE APPROACH RESIDENTIAL (DETAIL: ST-4A)
- G6 INSTALL DRIVE APPROACH COMMERCIAL (DETAIL ST-4B)
- G7 INSTALL NDCBU MAILBOX
- G8 INSTALL IRRIGATION CONDUIT (SEE IRRIGATION PLANS)

LEI
- A Utah Corporation -
ENGINEERS
SURVEYORS
PLANNERS
3302 N. Main Street
Spanish Fork, UT 84660
Phone: 801.798.0555
Fax: 801.798.9393
office@lei-eng.com
www.lei-eng.com

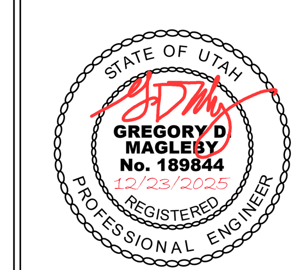

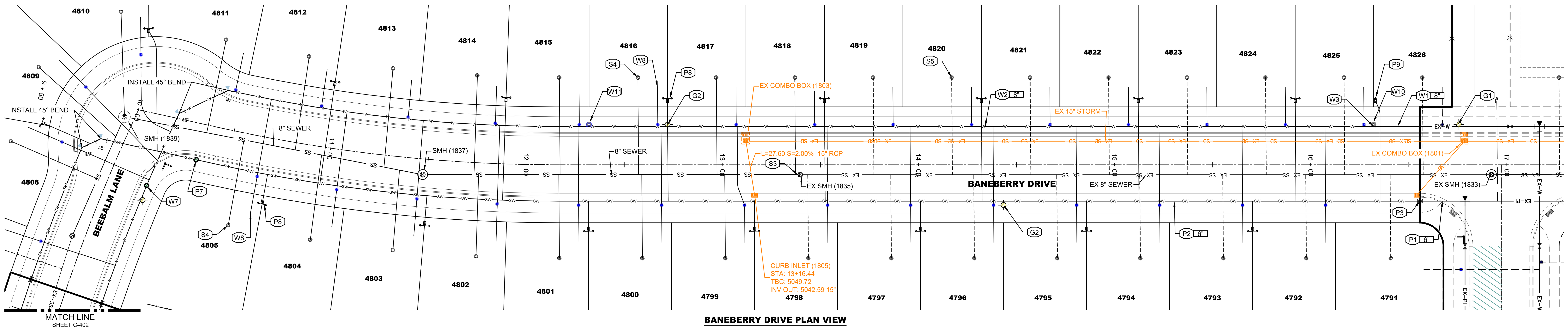

BANEBERRY DRIVE PLAN VIEW

CENTER LINE OMITTED FOR CLARITY

NOTE:
A RIGHT-OF-WAY ENCROACHMENT PERMIT MUST BE OBTAINED FROM THE CITY OF SARATOGA SPRINGS PRIOR TO DOING ANY WORK IN THE EXISTING RIGHT-OF-WAY.
APPLY FOR ENCROACHMENT PERMIT AT:
https://cityworks.saratogaspringscity.com/publicaccess/template/login.aspx

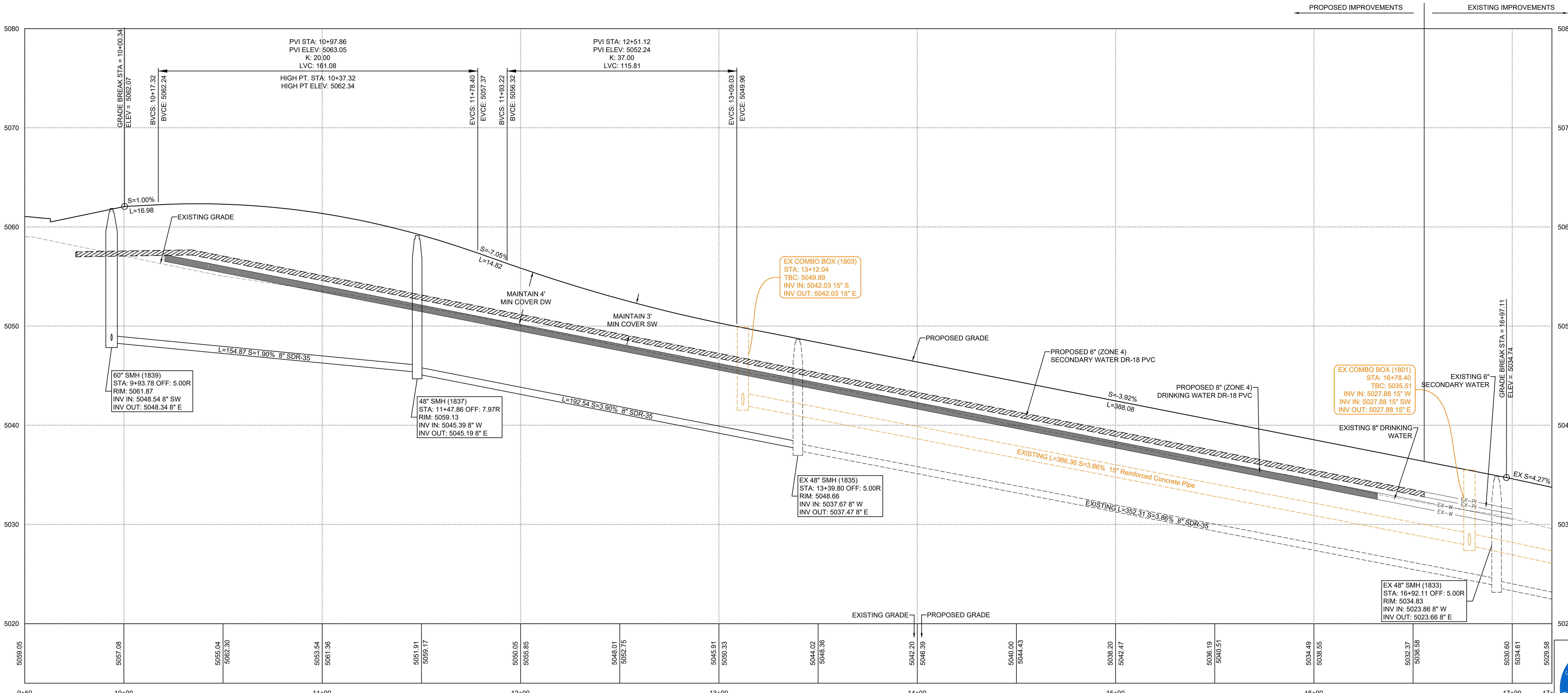

BANEBERRY DRIVE PROFILE VIEW

LEGEND

EXISTING	PROPOSED		DETAILS
		BOUNDARY LINE	
		STREET CENTERLINE	
		EASEMENT LINE	
		LOT LINES	
EX SS	SS	SEWER PIPE	SS-1, ST-7, (*2)
		SEWER MANHOLE	SS-2, SS-2A, (*2)
		4" SEWER CLEANOUT	SS-3, (*5)
EX SD	SD	STORM DRAIN PIPE (RCP)	SD-1, ST-7, (*2)
		STORM DRAIN MANHOLE	SS-2, (*2)
		CURB INLET	SD-2
		COMBO BOX	SD-5
		2'x2' YARD BOX	
		4'x4' CATCH BASIN	(*2)
		3'x3' CATCH BASIN	(*2)
		INLET/OUTLET W/ GRATE	SD-6
EX W	W	CULINARY WATER PIPE	DW-1, DW-2, DW-3, ST-7, (*2)
		45° PIPE ELBOW (W)	DW-2, DW-3, (*2)
		22.5° PIPE ELBOW (W)	DW-2, DW-3, (*2)
		11.25° PIPE ELBOW (W)	DW-2, DW-3, (*2)
		FIRE HYDRANT	DW-4
		3/4" SERVICE & METER (W)	DW-5
		PRV(W)	DW-10A, DW-10B, DW-10C, DW10-D, DW-10E
		AIR-VAC VALVE (W)	DW-12A, DW-12B, DW-15
		2" BLOW-OFF (W)	DW-13A, DW-15
		VALVE (W & SW)	(*1)(*2)
		TEE	DW-2, (*2)
		CROSS	DW-2, (*2)
EX-SW	SW	SECONDARY WATER PIPE	PI-1, PI-2, ST-7, (*2)
		45° PIPE ELBOW (SW)	PI-2, (*2)
		22.5° PIPE ELBOW (SW)	PI-2, (*2)
		11.25° PIPE ELBOW (SW)	PI-2, (*2)
		1" SINGLE SW SERVICE	PI-3, PI-5A, PI-5C
		1-1/2" DUAL SW SERVICE	PI-3, PI-5B, PI-5C
		SW SERVICE TO PARKS	PI-4
		AIR-VAC VALVE (SW)	PI-8A, PI-B, PI-13
		BACKFLOW PREVENTER	PI-11
		2" BLOW-OFF (SW)	PI-12A, PI-13
		30" C&G (COLLECTOR)	ST-1, ST-2A
		24" C&G (LOCAL)	ST-1, ST-2B
		24" SHED C&G	ST-1, ST-2D
		SIDEWALK	ST-1
STOP	STOP	STOP SIGN	ST-28
		STREET SIGN	ST-28
		MONUMENT	ST-29
		SPRINKLER CONDUIT	ST-8, (*3)
		FENCE	LS-14, LS-15
		STREET LIGHT LOCAL	LP-1A, LP-1B, LP-4, LP-6
		STREET LIGHT COLLECTOR	LP-2A, LP-2B, LP-2C, LP-5, LP-6
		POWER POLE	
		DITCH	
EX-FO		FIBER OPTIC	
EX-GAS		GAS	
EX-OHP	OHP	OVERHEAD POWER	
		FLOW ARROW	
		CONTOURS	
		100 YEAR FLOOD ROUTE	
		MATCH LINE	
		DRIVE APPROACH	ST-4, ST-4B
		ADA RAMP	ST-5A, ST-5B, ST-5C, ST-5D, ST-5E
		TRAIL	ST-15, (*4)

(*1)CULINARY & SECONDARY WATER LINES LESS THAN 12" TO BE GATE VALVES, LINES 12" & LARGER REQUIRE BUTTERFLY VALVES
(*2)SEE PLAN & PROFILE FOR SIZE & MATERIAL
(*3)SEE LANDSCAPE DESIGN FOR NUMBER OF CONDUITS & SIZES
(*4)SEE PLAN & PROFILE FOR WIDTH & DESIGN MATERIALS
(*5) SEWER SERVICE MINIMUM SLOPE 2%

CALL BEFORE YOU DIG! IT'S THE LAW
BLUE STAKES 1 800 662 4111

WILDFLOWER - VILLAGE 9 - PLAT X-3

CITY OF SARATOGA SPRINGS, UTAH COUNTY, UTAH

BANEBERRY DRIVE PLAN & PROFILE - STORM DRAIN

STA: 9+75 TO 17+00

REVISIONS
1 -
2 -
3 -
4 -
5 -

LEI PROJECT #: 2023-0055
DRAWN BY: BLS/MJV
CHECKED BY: GDM
SCALE: 1"=30' (PRINTED ON 24x36)
DATE: 12/23/2025

SHEET
C-407 SD

U:\LAND DESKTOP PROJECTS\13-0902 DAI COLLINS BROTHERS\DWG\VILLAGE 9\V9 PLAT X-3\23-0055 X-3 (407SD) BANEBERRY.DWG 12/23/2025 2:22 PM

SHEET NOTES

1. ALL SIGNS PER MUTCD & INSTALLED PER CITY STANDARD ST-28.

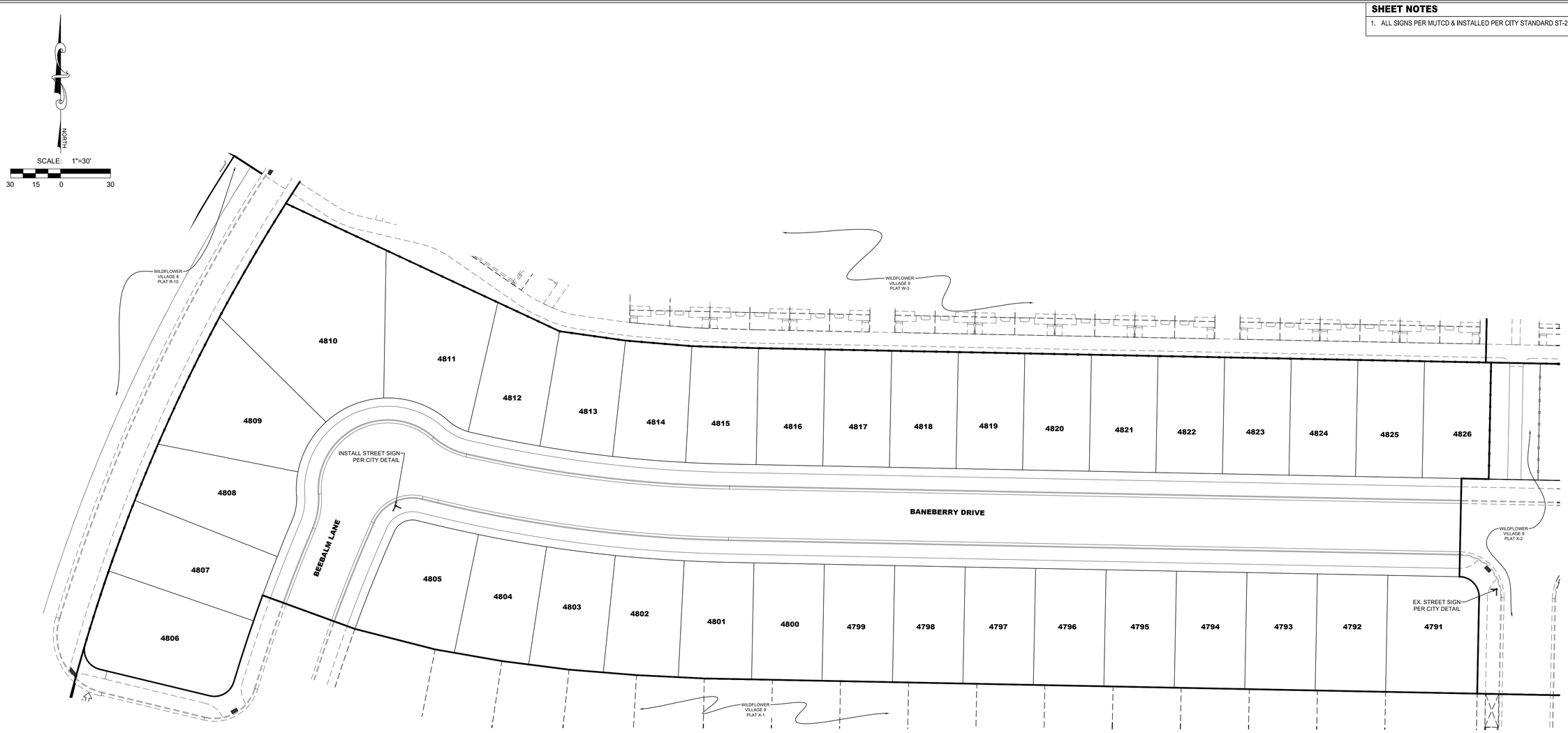

LEGEND

EXISTING	PROPOSED		DETAILS
		BOUNDARY LINE	
		STREET CENTERLINE	
		EASEMENT LINE	
		LOT LINES	
EX SS	SS	SEWER PIPE	SS-1, ST-7, (*2)
		SEWER MANHOLE	SS-2, SS-2A, (*2)
		4" SEWER SERVICE	SS-3, (*5)
EX SD	SD	STORM DRAIN PIPE (RCP)	SD-1, ST-7, (*2)
		STORM DRAIN MANHOLE	SS-2, (*2)
		CURB INLET	SD-2
		COMBO BOX	SD-5
		2'x2' YARD BOX	
		4'x4' CATCH BASIN	(*2)
		3'x3' CATCH BASIN	(*2)
		INLET/OUTLET W/ GRATE	SD-6
EX W	W	CULINARY WATER PIPE	DW-1, DW-2, DW-3, ST-7, (*2)
		45° PIPE ELBOW (W)	DW-2, DW-3, (*2)
		22.5° PIPE ELBOW (W)	DW-2, DW-3, (*2)
		11.25° PIPE ELBOW (W)	DW-2, DW-3, (*2)
		FIRE HYDRANT	DW-4
		3/4" SERVICE & METER (W)	DW-5
		PRV (W)	DW-10A, DW-10B, DW-10C, DW-10D, DW-10E

EXISTING	PROPOSED		DETAILS
		AIR-VAC VALVE (W)	DW-12A, DW-12B, DW-15
		2" BLOW-OFF (W)	DW-13A, DW-15
		VALVE (W & SW)	(*1)(*2)
		TEE	DW-2, (*2)
		CROSS	DW-2, (*2)
EX SW	SW	SECONDARY WATER PIPE	PI-1, PI-2, ST-7, (*2)
		45° PIPE ELBOW (SW)	PI-2, (*2)
		22.5° PIPE ELBOW (SW)	PI-2, (*2)
		11.25° PIPE ELBOW (SW)	PI-2, (*2)
		1" SINGLE SW SERVICE	PI-3, PI-5A, PI-5C
		1-1/2" DUAL SW SERVICE	PI-3, PI-5B, PI-5C
		SW SERVICE TO PARKS	PI-4
		AIR-VAC VALVE (SW)	PI-8A, PI-8B, PI-13
		BACKFLOW PREVENTER	PI-11
		2" BLOW-OFF (SW)	PI-12A, PI-13
		30" C&G (COLLECTOR)	ST-1, ST-2A
		24" C&G (LOCAL)	ST-1, ST-2B
		24" SHED C&G	ST-1, ST-2D
		SIDEWALK	ST-1
	STOP	STOP SIGN	ST-28
		STREET SIGN	ST-28
		MONUMENT	ST-29
		SPRINKLER CONDUIT	ST-8, (*3)

EXISTING	PROPOSED		DETAILS
		FENCE	LS-14, LS15,
		STREET LIGHT LOCAL	LP-1A, LP-1B, LP-4, LP-6
		STREET LIGHT COLLECTOR	LP-2A, LP-2B, LP-2C, LP-5, LP-6
		POWER POLE	
		DITCH	
EX FO		FIBER OPTIC	
EX GAS		GAS	
EX OHP	OHP	OVERHEAD POWER	
		FLOW ARROW	
		CONTOURS	
		100 YEAR FLOOD ROUTE	
		MATCH LINE	
		DRIVE APPROACH	ST-4A, ST-4B
		ADA RAMP	ST-5A, ST-5B, ST-5C, ST-5D, ST-5E
		TRAIL	ST-15, (*4)

(*1)CULINARY & SECONDARY WATER LINES LESS THAN 12" TO BE GATE VALVES, LINES 12" & LARGER REQUIRE BUTTERFLY VALVES
(*2)SEE PLAN & PROFILE FOR SIZE & MATERIAL
(*3)SEE LANDSCAPE DESIGN FOR NUMBER OF CONDUITS & SIZES
(*4)SEE PLAN & PROFILE FOR WIDTH & DESIGN MATERIALS
(*5) SEWER SERVICE MINIMUM SLOPE 2%

LEI
- A Utah Corporation -
ENGINEERS
SURVEYORS
PLANNERS
3302 N. Main Street
Spanish Fork, UT 84660
Phone: 801.798.0555
Fax: 801.798.9393
office@lei-eng.com
www.lei-eng.com

STATE OF UTAH
GREGORY D MAGLEBY
No. 189844
REGISTERED
PROFESSIONAL ENGINEER

WILDFLOWER - VILLAGE 9 - PLAT X-3

CITY OF SARATOGA SPRINGS, UTAH

SIGNAGE & STRIPING PLAN

REVISIONS
1 -
2 -
3 -
4 -
5 -

LEI PROJECT #: 2023-0055
DRAWN BY: BLS/MJV
CHECKED BY: GDM
SCALE: 1"=30' (PRINTED ON 24x36)
DATE: 12/23/2025
SHEET C-501

G:\LAND DESKTOP PROJECTS\13-0902 DH COLLINS BROTHERS\DWG\VILLAGE 9\V9 PLAT X-3\23-0055 X-3 (000-103) SHEETS.DWG 12/5/2023 3:41 PM

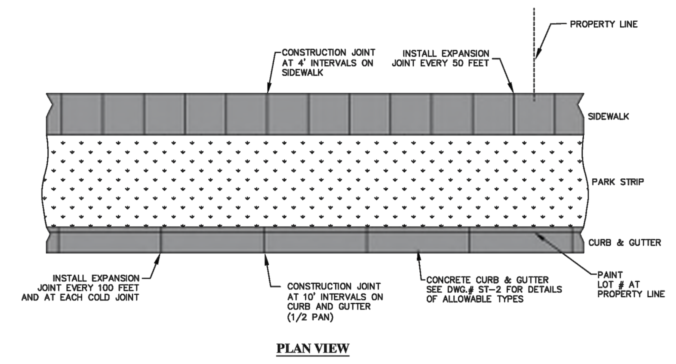

PLAN VIEW

NOTES:

1. A MINIMUM 6" DEPTH OF ROADBASE MATERIAL SHALL BE PLACED TO GRADE AND COMPACTED TO 95% OF MAXIMUM DRY DENSITY UNDER DRIVEWAY, WATERWAY, AND CURB & GUTTER PRIOR TO PLACEMENT OF CONCRETE.
2. A MINIMUM 6" DEPTH OF ROADBASE MATERIAL SHALL BE PLACED TO GRADE AND COMPACTED TO 95% OF MAXIMUM DRY DENSITY UNDER SIDEWALK AT ALL OTHER LOCATIONS PRIOR TO PLACEMENT OF CONCRETE.
3. WHERE CONSTRUCTION IS ADJACENT TO STATE HIGHWAY FRONTAGE, STATE HIGHWAY DEPARTMENT REQUIREMENTS SHALL GOVERN.
4. CONCRETE SHALL BE 3/4 INCH MAXIMUM AGGREGATE, 6.3 BAGS PER YARD OF TYPE 2 CEMENT WITH A MINIMUM COMPRESSIVE STRENGTH OF 4,000 PSI AT 28 DAYS.
5. EXPANSION JOINTS FOR CURB & GUTTER ARE TO BE SPACED NO MORE THAN 100 FT. AND SIDEWALKS SHALL BE SPACED EVERY 50 FT. EXPANSION JOINTS SHALL BE CONSTRUCTED BY PLACING AN APPROVED MATERIAL, (TYPICALLY BITUMINOUS IMPREGNATED FIBERBOARD), THE FULL DEPTH OF THE CONCRETE.
6. CONSTRUCTION JOINT IS MADE BY SCORING THE CONCRETE WITH 1/2" RADIUS EDGING TOOL OR OTHER METHOD APPROVED BY ENGINEER.
7. SLOPE SIDEWALK TO ROADWAY AT 1.5% GRADE (+/– 0.5% MAX).
8. LOCATE ALL INLET GRATES 2' MINIMUM AWAY FROM THE PEDESTRIAN CROSSWALK, WITH ALL DRAINAGE INTERCEPTED BEFORE IT GETS TO THE CROSSWALK AREA.
9. THE SIDEWALK SHALL BE A MIN. 5" THICK CONCRETE.
10. INSTALL MAGNETIC DETECTOR TAPE WITH A MIN. OF 14 GAUGE COATED TRACER WIRE FOR ALL PVC OR OTHER PIPE.
11. PAINT LOT NUMBERS AT PROPERTY LINES.
12. SEWER LATERAL LOCATIONS TO BE MARKED ON TOP OF CURB WITH AN S.
13. CULINARY WATER LATERAL LOCATIONS TO BE MARKED ON TOP OF CURB WITH A W.
14. SECONDARY WATER LATERAL LOCATIONS TO BE MARKED ON TOP OF CURB WITH AN I.
15. WATER VALVE LOCATIONS TO BE MARKED ON TOP OF CURB WITH A V.

SIDEWALK AND CURB & GUTTER | DATE: MARCH 2022 | DRAWING NAME: ST-1 | DRAWN BY: JRP | CHECKED: | APPROVED: | REVISIONS: REVISION, DATE, BY, COMMENTS | SARATOGA SPRINGS CITY | STANDARD DETAILS | STREET STANDARDS | **ST-1**

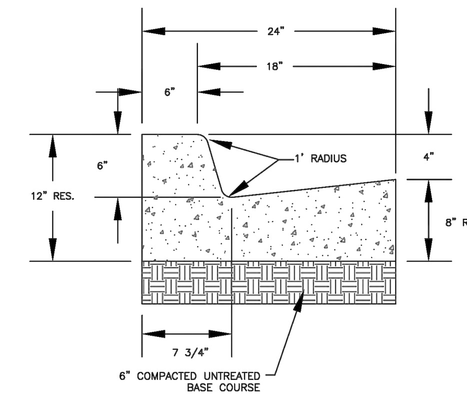

*FOR USE ON LOCAL AND LOCAL COLLECTOR ROADWAYS

RESIDENTIAL 24" HIGH BACK CURB & GUTTER | DATE: MARCH 2022 | DRAWING NAME: ST-2B | DRAWN BY: JRP | CHECKED: | APPROVED: | SARATOGA SPRINGS CITY | STANDARD DETAILS | STREET STANDARDS | **ST-2B**

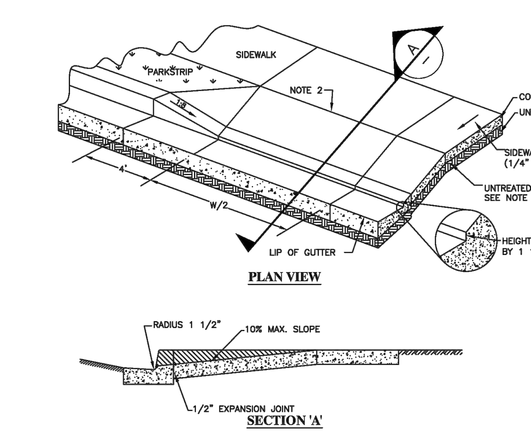

NOTES:

1. EDGE CONCRETE WITH 1/2" RADIUS EDGING TOOL.
2. PLACE 1/2" EXPANSION JOINT BETWEEN DRIVEWAY APRON AND CURB AND IN THE DRIVEWAY CENTERLINE IF "W" IS GREATER THAN 20'. FILLER MATERIAL SHALL BE FULL DEPTH OF CONCRETE PLUS 1", WITH TOP SET FLUSH WITH TOP OF CONCRETE.
3. USE UNTREATED ROADBASE UNDER CURB, GUTTER AND SIDEWALK. COMPACT TO 95% OF THE MAXIMUM DRY DENISTY.
4. ALL CONCRETE SLABS WITH A LENGTH/WIDTH RATIO GREATER THAN 2:1 SHALL HAVE CONTRACTION JOINTS INSTALLED AS REQUIRED TO STAY WITHIN 2:1 RATIO.
5. BACK EDGE OF SIDEWALK TO BE SET AT AN ELEVATION 2% HIGHER THAN THE TOP BACK OF CURB.
6. SIDEWALK TO BE A MINIMUM OF 5 FEET WIDE UNLESS OTHERWISE SPECIFIED.
7. MATERIALS, CONSTRUCTION, AND WORKMANSHIP SHALL BE IN ACCORDANCE WITH CITY'S STANDARD SPECIFICATIONS.

DRIVE APPROACH DIMENSIONS

DIMENSION	LENGTH ACCORDING TO ZONE
W	12'–0" MIN. RESIDENTIAL ZONES 30'–0" MAX. RESIDENTIAL ZONES
T	0'–5" RESIDENTIAL ZONES

SLOPE TABLE

DIMENSION	ZONE
(A) 12% MAX.	RESIDENTIAL ZONE
(B) 13% MAX.	RESIDENTIAL ZONE
(C) 15% MAX.	RESIDENTIAL ZONE

SINGLE FAMILY RESIDENTIAL DRIVE APPROACH | DATE: MARCH 2022 | DRAWING NAME: ST-4A | DRAWN BY: JRP | CHECKED: | APPROVED: | SARATOGA SPRINGS CITY | STANDARD DETAILS | STREET STANDARDS | **ST-4A**

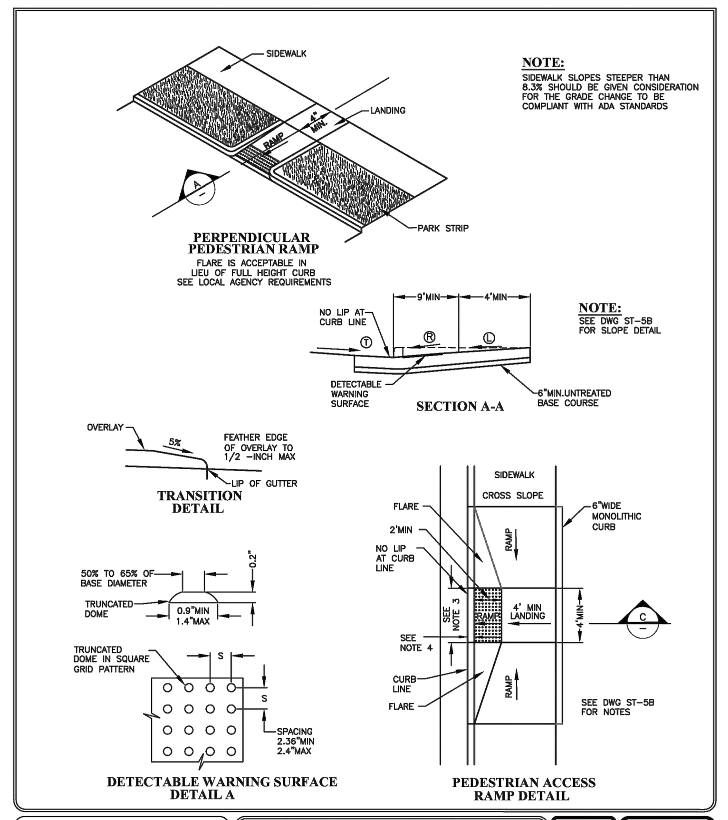

NOTE:
SIDEWALK SLOPES STEEPER THAN 8.3% SHOULD BE GIVEN CONSIDERATION FOR THE GRADE CHANGE TO BE COMPLIANT WITH ADA STANDARDS

NOTE:
SEE DWG ST-5B FOR SLOPE DETAIL

ADA ACCESSIBLE CURB RAMP | DATE: AUGUST 2017 | DRAWING NAME: ST-5A | DRAWN BY: ETL | CHECKED: | APPROVED: | SARATOGA SPRINGS CITY | STANDARD DETAILS | STREET STANDARDS | **ST-5A**

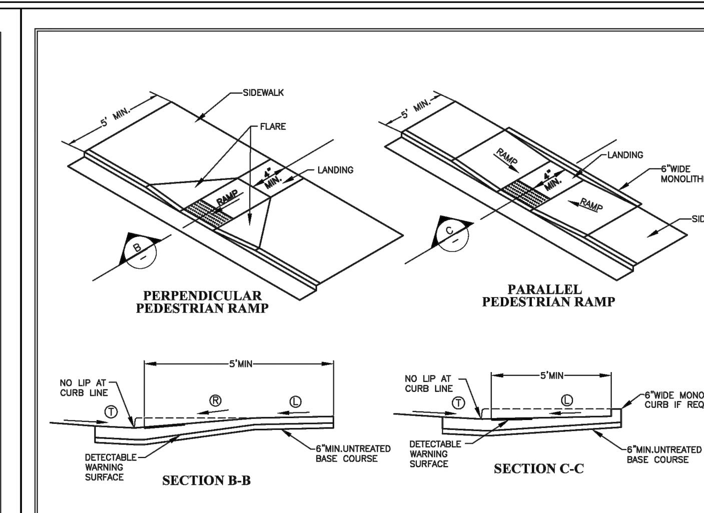

SLOPE TABLE

	ITEM	MAX. RUNNING SLOPE *	MAX. CROSS SLOPE *
(L)	LANDING	2% (1V:48H) (b)	2% (1V:48H) (b)
(R)	RAMP	8.33% (1V:12H) (c)	2% (1V:48H) (d)
(T)	TRANSITION	5% (1V:20H) (a)	2% (1V:48H) (d)
	SIDEWALK	---	2% (1V:48H)
	FLARE	10% (1V:10H)	---

* RUNNING SLOPE IS IN THE DIRECTION OF PEDESTRIAN TRAVEL, WHILE CROSS SLOPE IS PERPENDICULAR TO PEDESTRIAN TRAVEL.

(a) TRANSITION RUNNING SLOPE NEEDS TO BE CONSTANT ACROSS ENTIRE CURB CUT. WARP GUTTER PAN TO MEET REQUIRED TRANSITION SLOPE AT CURB CUT.

EXCEPTION:
(b) SLOPE REQUIREMENTS DO NOT APPLY AT MID–BLOCK CROSSINGS.
(c) PARALLEL RAMPS ARE NOT REQUIRED TO EXCEED 15–FEET IN LENGTH.
(d) CROSS SLOPE REQUIREMENT DOES NOT APPLY AT PERPENDICULAR RAMP MID–BLOCK CROSSING.

NOTES:

1. CONFIGURATION OF RAMPS AND LANDINGS MAY BE CHANGED BUT MUST MEET PEDESTRIAN RAMP DIMENSION AND SLOPE REQUIREMENTS. SPECIFIC SITE CONDITIONS WILL VARY. THE USE OF FLARES, CURBWALLS, ETC. ARE AT THE DISCRETION OF THE ENGINEER.
2. PERPENDICULAR AND PARALLEL PEDESTRIAN RAMPS SHOWN ON THIS DRAWING ARE ACCEPTABLE FOR USE AT MID BLOCK OR CORNER INSTALLATIONS. REFER TO STD DWG ST 5C, 5D AND ST 5C FOR EXAMPLES OF CORNER INSTALLATIONS.
3. PROVIDE DETECTABLE WARNING SURFACE FOR FULL WIDTH OF RAMP, LANDING, OR CURB CUT. SEE DETAIL A, DWG 5A, FOR DETECTABLE WARNING SURFACE DIMENSIONS.
4. LOCATE DETECTABLE WARNING SURFACE SO THAT THE EDGE NEAREST THE STREET IS 6" TO 8" FROM THE CURB LINE.
5. PROVIDE DETECTABLE WARNING SURFACE THAT CONTRASTS WITH ADJACENT WALKING SURFACE, EITHER LIGHT–ON–DARK OR DARK–ON–LIGHT. ACCEPTABLE COLORS INCLUDE: YELLOW.
6. USE CLASS AA(AE) CONCRETE.
7. USE UNTREATED BASE COURSE UNDER ALL CONCRETE FLATWORK.

ADA ACCESSIBLE CURB RAMP | DATE: MARCH 2022 | DRAWING NAME: ST-5B | DRAWN BY: JRP | CHECKED: | APPROVED: | SARATOGA SPRINGS CITY | STANDARD DETAILS | STREET STANDARDS | **ST-5B**

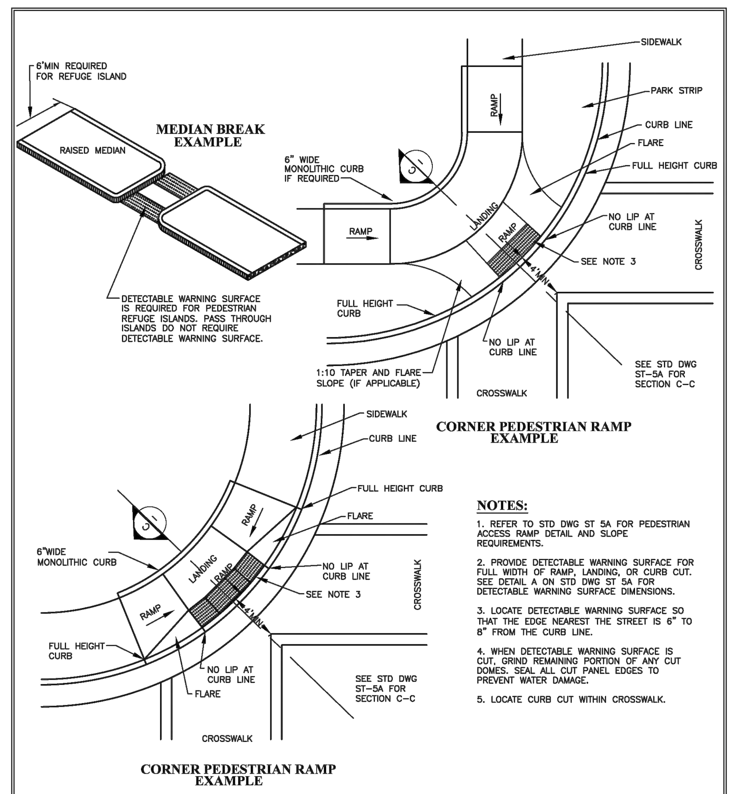

NOTES:

1. REFER TO STD DWG ST 5A FOR PEDESTRIAN ACCESS RAMP DETAIL AND SLOPE REQUIREMENTS.
2. PROVIDE DETECTABLE WARNING SURFACE FOR FULL WIDTH OF RAMP, LANDING, OR CURB CUT. SEE DETAIL A ON STD DWG ST 5A FOR DETECTABLE WARNING SURFACE DIMENSIONS.
3. LOCATE DETECTABLE WARNING SURFACE SO THAT THE EDGE NEAREST THE STREET IS 6" TO 8" FROM THE CURB LINE.
4. WHEN DETECTABLE WARNING SURFACE IS CUT, GRIND REMAINING PORTION OF ANY CUT DOMES. SEAL ALL CUT PANEL EDGES TO PREVENT WATER DAMAGE.
5. LOCATE CURB CUT WITHIN CROSSWALK.

ADA ACCESSIBLE CURB RAMP | DATE: MARCH 2022 | DRAWING NAME: ST-5E | DRAWN BY: JRP | CHECKED: | APPROVED: | SARATOGA SPRINGS CITY | STANDARD DETAILS | STREET STANDARDS | **ST-5E**

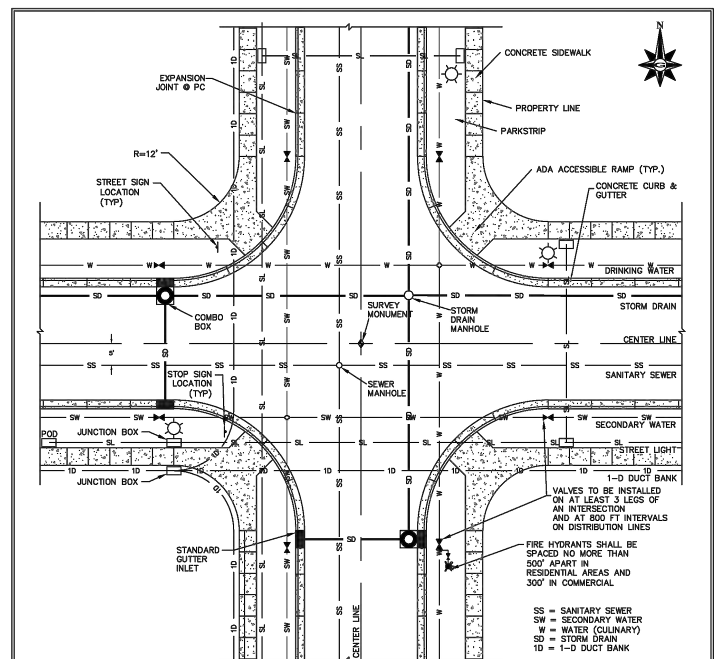

NOTES:

1. LAND DRAINS ARE UNACCEPTABLE UNLESS EXPLICITLY ALLOWED BY CITY ENGINEER. WHEN ALLOWED, PIPES SHALL NOT BE PERFORATED OR DESIGNED TO ACCEPT WATER WITHIN THE STREET RIGHT–OF–WAY.
2. CURB RADIUS ON LOCAL AND COLLECTOR RIGHT–OF–WAYS SHALL BE 25', ON MINOR ARTERIALS IT SHALL BE 35', AND ON MAJOR AND PRINCIPAL ARTERIALS SHALL BE 40' AS MEASURED FROM FACE OF CURB.
3. CHECK ALL CITY STANDARDS FOR UTILITY LOCATIONS.
4. STREET LIGHTS ARE TO BE CENTERED IN PARK STRIPS.
5. STREET LIGHTS ARE TO BE PLACED AT INTERSECTIONS AND EVERY 300 FEET, ALTERNATING SIDES OF STREET.
6. MANHOLES SHALL BE LOCATED A MINIMUM OF 7' FROM EDGE OF GUTTER WHEN ROAD CURVATURE REQUIRES DEVIATION FROM THE ABOVE STANDARD.

STANDARD INTERSECTION & UTILITIES | DATE: MARCH 2022 | DRAWING NAME: ST-7 | DRAWN BY: JRP | CHECKED: | APPROVED: | SARATOGA SPRINGS CITY | STANDARD DETAILS | STREET STANDARDS | **ST-7**

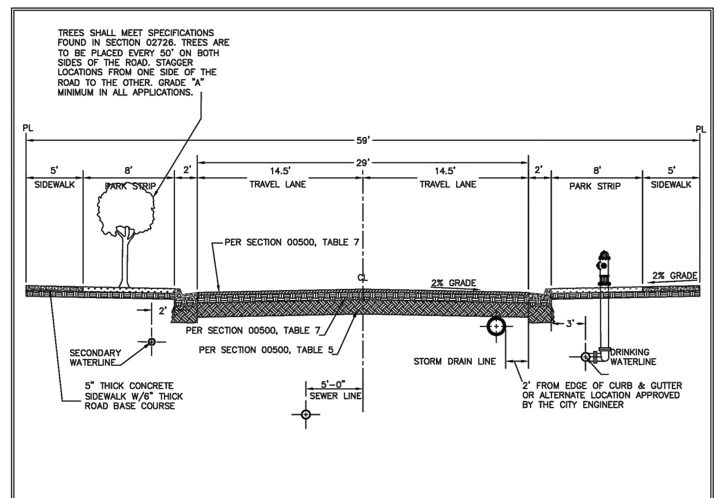

NOTES:

1. MAXIMUM DIFFERENCE IN ELEVATION BETWEEN CURB ON OPPOSITE SIDES OF STREET SHALL NOT EXCEED 1'–0"
2. PROVIDE A MINIMUM 6" THICKNESS OF 3/4" OR 1" CRUSHED GRAVEL BASE COURSE UNDER SIDEWALKS, DRIVEWAY APPROACHES, AND CURB & GUTTER.
3. INSTALL TYPE 2 SLURRY SEAL.
4. HOUSES MAY FRONT ON THESE STREETS.
5. THIS ROW CROSS SECTION SHALL BE PERMITTED FOR PRIVATE ROAD CROSS SECTIONS IN THE FOLLOWING ZONES: R–2, R–3 AND R–4.

(2021)

LOCAL ROADWAY 59' RIGHT-OF-WAY | DATE: AUGUST 2017 | DRAWING NAME: ST-8 | DRAWN BY: ETL | CHECKED: | APPROVED: | REV 1, 08-31-17, EDITED DIMENSIONS, ADDED REFERENCES TO SPECIFICATIONS, DELETED UNNECESSARY NOTES. | SARATOGA SPRINGS CITY | STANDARD DETAILS | STREET STANDARDS | **ST-8**

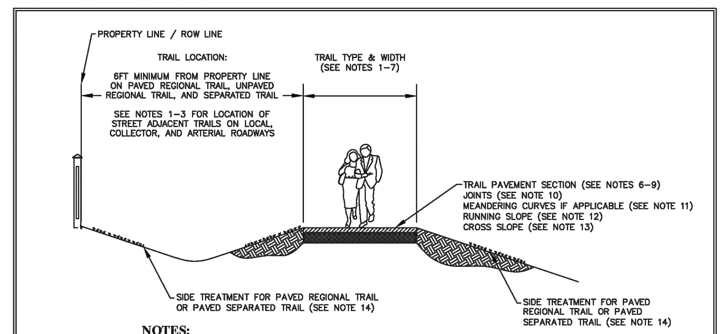

NOTES:

1. TRAILS USED FOR UTILITY ACCESS SHALL BE 12FT MINIMUM WIDTH.
2. STREET ADJACENT TRAILS/SIDEWALKS SHALL BE CONCRETE 5FT MINIMUM WIDTH FOR LOCAL, COLLECTOR, AND MINOR ARTERIAL ROADWAYS.
3. STREET ADJACENT TRAILS SHALL BE CONCRETE 8FT MINIMUM WIDTH AND MEANDERING FOR MAJOR ARTERIAL, PRINCIPAL ARTERIAL, AND INTERIM ARTERIAL ROADWAYS (SEE STANDARD DRAWINGS ST–11, ST–12, AND ST–13).
4. PAVED REGIONAL TRAILS SHALL BE 12FT MINIMUM WIDTH.
5. PAVED SEPARATED TRAILS SHALL BE 8FT MINIMUM WIDTH.
6. UNPAVED REGIONAL TRAILS SHALL BE AN APPROVED NATURAL SURFACE OR SOFT SURFACE MATERIAL WITH 2FT MINIMUM WIDTH. WIDTH INCREASES BASED ON PROJECTED TRAIL USER TYPE.
7. CONCRETE IS REQUIRED IN RIPARIAN CORRIDORS.
8. CONCRETE TRAILS SHALL BE 5 INCHES CONCRETE OVER 6 INCHES UNTREATED BASE COURSE.
9. ASPHALT TRAILS SHALL BE 3 INCHES ASPHALT OVER 8 INCHES UNTREATED BASE COURSE.
10. CONCRETE TRAILS SHALL HAVE CONSTRUCTION JOINTS AT 8FT INTERVALS AND EXPANSION JOINTS AT 40FT INTERVALS.
11. MEANDERING TRAIL CURVE RADII SHALL BE 100FT MINIMUM.
12. RUNNING SLOPE OF TRAIL:

    STREET ADJACENT TRAILS ON LOCAL, COLLECTOR, MINOR ARTERIAL, MAJOR ARTERIAL, PRINCIPAL ARTERIAL, AND INTERIM ARTERIAL ROADWAYS SHALL HAVE A RUNNING SLOPE FOLLOWING THE LONGITUDINAL GRADE OF THE ROADWAY.

    PAVED REGIONAL TRAILS, UNPAVED REGIONAL TRAILS, AND PAVED SEPARATED TRAILS SHALL BE CONSTRUCTED TO MATCH THE EXISTING TOPOGRAPHY AS CLOSELY AS POSSIBLE. DESIRED RUNNING SLOPE IS 5% OR LESS. RUNNING SLOPE SHALL NOT EXCEED 12%. NO MORE THAN 30% OF THE TOTAL LENGTH OF THE TRAIL SHALL EXCEED 12:1 (8.33%). IF STEEPER GRADES BETWEEN 5%–12% ARE USED, RESTING INTERVALS OF 100FT OR MORE IN LENGTH SHALL BE PROVIDED MORE FREQUENTLY AS GRADE INCREASES.
13. CROSS SLOPE OF TRAIL SHALL BE 1.5% PLUS MINUS 0.5%.
14. SIDE TREATMENTS OF PAVED REGIONAL TRAILS AND PAVED SEPARATED TRAILS SHALL BE 4:1 LANDSCAPED V–DITCH ON THE UPHILL SIDE OF TRAIL WITH 6FT MINIMUM WIDTH OF V–DITCH AND ON THE DOWNHILL SIDE OF TRAIL A 4:1 LANDSCAPED SLOPE FOR 4 FT MINIMUM. PROVIDE DRAINS UNDER THE TRAIL AT APPROPRIATE LOCATIONS.

TRAILS | DATE: MARCH 2022 | DRAWING NAME: ST-34 | DRAWN BY: JRP | CHECKED: | APPROVED: | SARATOGA SPRINGS CITY | STANDARD DETAILS | STREET STANDARDS | **ST-15**

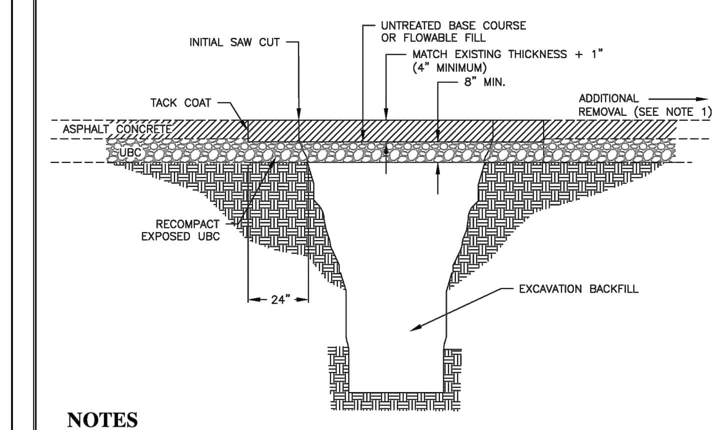

NOTES

1. IF ADDITIONAL PAVEMENT REMOVAL REQUIRED: REMOVE ADDITIONAL PAVEMENT TO A PAINTED LANE STRIPE, A LIP OF GUTTER, A CURB, AN EXISTING PAVEMENT PATCH OR AN EDGE OF THE PAVEMENT IF SUCH STREET FEATURE IS WITHIN 2 FEET OF THE SECOND SAW–CUT.
2. FLOWABLE FILL: PROVIDE 28 DAYS 60 PSI CONTROLLED LOW STRENGTH MATERIAL AS SPECIFIED IN APWA SECTION 31 05 15. USE FILL MATERIAL WHICH FLOWS EASILY AND VIBRATION IS NOT REQUIRED. CURE TO INITIAL SET BEFORE PLACING AGGREGATE BASE OR ASPHALT PAVEMENT. USE FLOWABLE FILL IN EXCAVATIONS THAT ARE TOO NARROW TO RECEIVE COMPACTION EQUIPMENT.
3. JOINT REPAIR: IF A CRACK OCCURS AT THE EDGE, "T" PATCH CONNECTION TO EXISTING PAVEMENT OR AT ANY STREET FIXTURE, SEAL THE CRACK.
4. PATCH REPAIR: REPAIR THE ASPHALT PAVEMENT PATCH IF ANY OF THE FOLLOWING CONDITIONS OCCUR WITHIN THE PATCH:
   A. PAVEMENT SURFACE DISTORTION EXCEEDS ¼" DEVIATION IN 10 FEET, REPAIR. PLANE OFF SURFACE DISTORTIONS. COAT PLANED SURFACES WITH CATIONIC OR ANIONIC EMULSION AND PROVIDE SAND BLOTTER.
   B. CRACK AT LEAST 1–FOOT LONG AND ⅛ INCH WIDE OCCUR MORE OFTEN THAN 1 IN 10 SQUARE FEET. REPAIR OPTION: CRACK SEAL.
   C. ASPHALT RAVELING IS GREATER THAN 1 SQUARE FOOT PER 100 SQUARE FEET. REPAIR OPTION: MILL AND INLAY

TEE PATCH | DATE: MARCH 2022 | DRAWING NAME: ST-26 | DRAWN BY: JRP | CHECKED: | APPROVED: | SARATOGA SPRINGS CITY | STANDARD DETAILS | STREET STANDARDS | **ST-26**

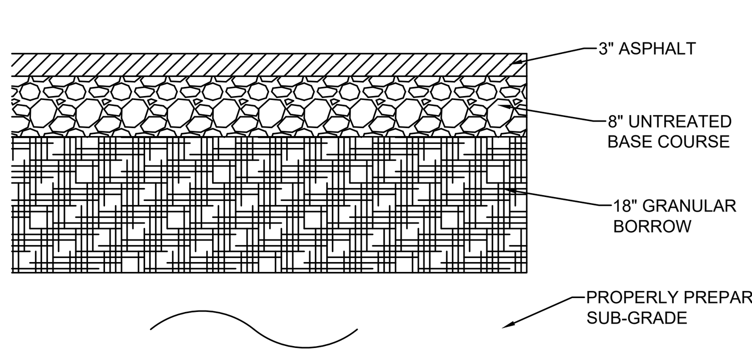

CBR VALUES ARE 3.0 & 4.4
SEE CBR REPORT FROM
CMT TECHNICAL
SERVICES

1 | PAVEMENT SECTION RESIDENTIAL ROADWAY

NOTES:

1. MARKERS MUST BE PLACED AT ALL "OFFSITE" UTILITIES. PLACE AT MANHOLES AND EVERY 500' ON ALL UNDERGROUND UTILITIES.
2. MANHOLE MARKERS: MARKERS SHALL BE MANUFACTURED OF FIBER REINFORCED COMPOSITE MATERIAL. THAT REINFORCEMENT SHALL BE COMPRISED OF BOTH LINEAL STRANDS AND HORIZONTAL MESH MATS. MARKERS HALL BE FLAT WITH ROUNDED RIB DOWN THE CENTER AND RAILS ON EACH SIDE; SHALL BE AT LEAST 3–3/4" WIDE AND AT LEAST 66" TALL.
3. MARKERS SHALL BE CAPABLE OF WITHSTANDING A MINIMUM OF 10 VEHICLE IMPACTS AT 55 MPH WITH A CAR BUMPER.
4. MARKERS SHALL BE COATED WITH A COLORED COATING THAT WILL TOTALLY PREVENT ULTRA–VIOLET LIGHT FROM REACHING THE RESIN PORTION OF THE MARKER. COATING SHALL NOT FADE, PEEL, OR BLISTER AFTER A MINIMUM OF 2000 HOURS IN A QUV WEATHEROMETER.
5. STANDARD SIZE, HIGH VISIBILITY DECALS SHALL BE PLACED ON EACH SIDE OF THE MARKER. THE DECALS SHALL INCLUDE: THE INTERNATIONAL "NO–DIG" SYMBOL; FEDERAL LAW WARNING TO DETER VANDALS; THE WARNING MESSAGE, TO INCLUDE "WARNING", THE TYPE OF UTILITY AND "SARATOGA SPRINGS, CALL 776–9793.
6. COLORS SHALL BE AS FOLLOWS PER APWA SPECIFICATIONS:

RED: ELECTRIC POWER LINES, CABLES, CONDUIT AND LIGHTING CABLES
YELLOW: GAS, OIL, STEAM, PETROLEUM OR GASEOUS MATERIALS
ORANGE: COMMUNICATIONS, ALARM, SIGNAL, CABLES OR CONDUITS
BLUE: POTABLE WATER
PURPLE: RECLAIMED WATER, IRRIGATION AND SLURRY LINES
GREEN: SEWER AND STORM DRAIN LINES

UTILITY MARKER | DATE: MARCH 2022 | DRAWING NAME: ST-27 | DRAWN BY: JRP | CHECKED: | APPROVED: | SARATOGA SPRINGS CITY | STANDARD DETAILS | STREET STANDARDS | **ST-27**

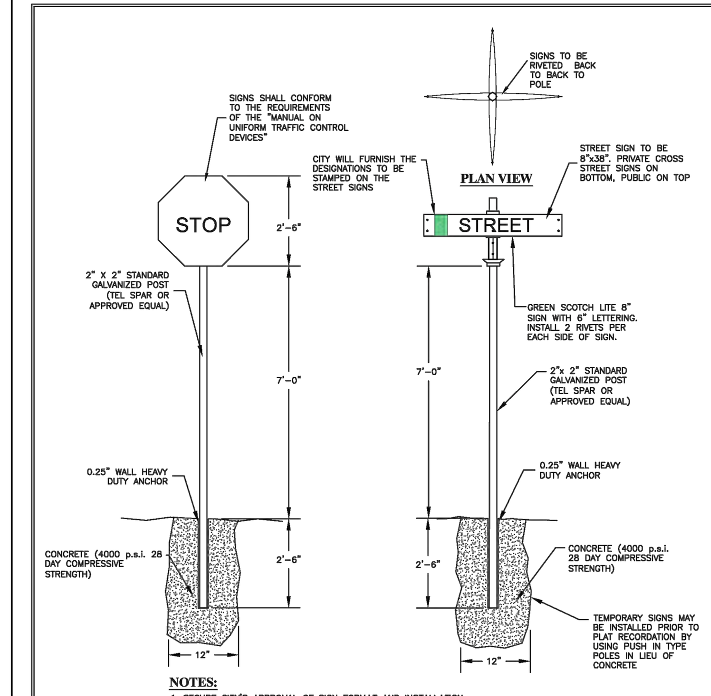

NOTES:

1. SECURE CITY'S APPROVAL OF SIGN FORMAT AND INSTALLATION.
2. INSTALL THE EDGE OF THE SIGN TWO FEET FROM THE VERTICAL EXTENSION OF THE BACK OF CURB AS NEAR AS POSSIBLE TO THE APPROACH CURB POINT OF CURVATURE. SIGNS SHOULD NOT OVERHANG SIDEWALK OR CURB & GUTTER.
3. ALL STREET SIGNS (STOP, SPEED, ETC.) SHALL BE 7' MINIMUM FROM GROUND TO BOTTOM OF SIGN.
4. ALL STREET SIGNS TO BE COATED WITH 3M–HIGH INTENSITY SHEETING, OR ACCEPTABLE EQUAL.
5. PRIVATE STREET SIGNS TO HAVE BLUE BACKGROUND.

STREET SIGNS AND REGULATORY SIGNS | DATE: MARCH 2022 | DRAWING NAME: ST-28 | DRAWN BY: JRP | CHECKED: | APPROVED: | SARATOGA SPRINGS CITY | STANDARD DETAILS | STREET STANDARDS | **ST-28**

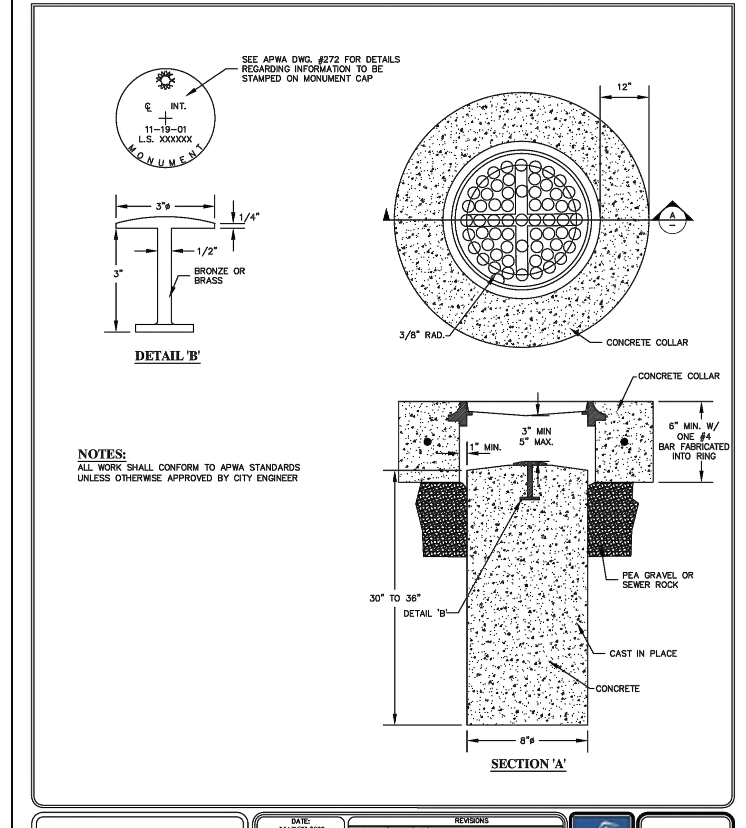

NOTES:
ALL WORK SHALL CONFORM TO APWA STANDARDS UNLESS OTHERWISE APPROVED BY CITY ENGINEER

SURVEY MONUMENT | DATE: MARCH 2022 | DRAWING NAME: ST-29 | DRAWN BY: JRP | CHECKED: | APPROVED: | SARATOGA SPRINGS CITY | STANDARD DETAILS | STREET STANDARDS | **ST-29**

LEI
- A Utah Corporation -
ENGINEERS
SURVEYORS
PLANNERS

3302 N. Main Street
Spanish Fork, UT 84660
Phone: 801.798.0555
Fax: 801.798.9393
office@lei-eng.com
www.lei-eng.com

STATE OF UTAH
GREGORY D MAGLEBY
No. 189844
12/23/2025
REGISTERED PROFESSIONAL ENGINEER

WILDFLOWER - VILLAGE 9 - PLAT X-3

CITY OF SARATOGA SPRINGS, UTAH COUNTY, UTAH

DETAILS

REVISIONS
1 -
2 -
3 -
4 -
5 -

LEI PROJECT #: 2023-0055
DRAWN BY: BLS/MJV
CHECKED BY: GDM
SCALE: NONE (PRINTED ON 24x36)
DATE: 12/23/2025

CALL BEFORE YOU DIG! IT'S THE LAW BLUE STAKES 1-800-662-4111

SHEET
C-901

U:\LAND DESKTOP PROJECTS\13-0902 DAI COLLINS BROTHERS\DWG\VILLAGE 9\V9 PLAT X-3\23-0055 X-3 (901-906) DETAILS.DWG 12/5/2025 4:03 PM

STREET LIGHT NOTES:

1. LIGHT POLES AND LUMINAIRES SHALL CONFORM TO 05540 OF THE CITY STANDARDS AND SHALL BE ACCEPTABLE TO THE CITY ENGINEER.
2. ALTERNATIVE PRODUCT ASSEMBLIES MAY BE SUBSTITUTED IF DEEMED TO BE EQUAL AND APPROVED IN WRITING BY THE CITY
3. **ALL PRIVATE STREET LIGHTS SHALL BE MASTER-METERED AT PRIVATELY OWNED SERVICES**
4. **ALL PRIVATE STREET LIGHTS SHALL NOT BEAR ANY SORT OF CITY IDENTIFICATION, SUCH AS THE CITY LOGO**
5. ALL STREET LIGHTS SHALL BE 120 VOLTS NOMINAL TO GROUND.
6. DUCT SEAL SHALL BE USED AT CONDUIT OPENINGS
7. WIRE MUST BE PULLED USING POLY PULL TAPE BY ACCEPTABLE INDUSTRY STANDARD METHODS
8. TERMINATE CONDUIT IN BOXES WITH GLUE ON CONDUIT END BELLS ATTACHED TO END OF CONDUITS
9. CONDUIT ENTRY SHALL BE IN THE BOTTOM OF THE BOX. SIDE ENTRY SHALL NOT BE PERMITTED
10. STREET LIGHTS SHALL BE LOCATED AT ROADWAY INTERSECTIONS (NEAR FIRE HYDRANTS WHERE POSSIBLE), PLACED EVERY 300' ON ALTERNATE SIDES OF THE STREET, AND AT OTHER REQUIRED LOCATIONS PER CITY STANDARDS.
11. MARK JUNCTION BOX LIDS "**STREET LIGHTS**"
12. INSTALL 1.25" TRADE SIZE SCH40 PVC CONDUIT WITH 24" COVER AND SAND BEDDING
13. WIRES BELOW GRADE SHALL BE SINGLE CONDUCTOR (NOT CABLE ASSEMBLY) #6 AWG XHHW-2 COPPER UNLESS OTHERWISE NOTED. WIRES IN POLE TO BE #12 THHN SINGLE CONDUCTOR STRANDED WIRES. WIRE SHALL CONSIST OF CONTINUOUSLY COLORED INSULATION IN COLORS NOTED ON DETAIL (PHASE TAPE COLOR IDENTIFICATION NOT PERMITTED.) WIRE SIZE SHALL BE UPSIZED AS NEEDED FOR NEC COMPLIANCE. SHOW VOLTAGE DROP CALCULATIONS UPON REQUEST.
14. CONTRACTOR TO INSTALL POD JUNCTION BOX WITH FUSE. BOX TO BE LOCATED 4' MINIMUM AND 10' MAXIMUM FEET FROM RMP SOURCE. PROVIDE 2" SCH 40 PVC CONDUIT TO RMP SOURCE. PROVIDE CONDUCTORS LONG ENOUGH TO REACH RMP POWER SOURCE PLUS 5'. CONTRACTOR SHALL SUPPLY PULL STRING IN CONDUIT.
15. POD GROUNDING ELECTRODES AND GECS SHALL BE COMPLIANT WITH NEC STANDARDS. IF GROUND RODS ARE USED, TWO SHALL BE REQUIRED PER NEC. REFER TO DETAIL DRAWINGS.
16. POD AND SERVICE CONDUCTOR/CONDUIT INSTALLATION REQUIREMENTS ARE BASED PRIMARILY ON RMP STANDARDS. CONFIRM INSTALLATION REQUIREMENTS WITH RMP REPRESENTATIVE AND PACIFICORP'S LATEST SIX STATES ELECTRICAL SERVICE REQUIREMENTS DOCUMENT.
17. CONNECT EQUIPMENT GROUND WIRE TO METAL SHELL OF LIGHT POLE. BOND ALL METAL PARTS AS PER NFPA 70.250
18. EACH INDIVIDUAL STREET LIGHT SHALL HAVE A JUNCTION BOX WITH A FUSE LOCATED WITHIN 4' OF STREET LIGHT BASE. FUSE ASSEMBLIES SHALL BE BUSSMAN KTK 5 AMP. IF MORE THAN ONE POLE IS BEING SUPPLIED, POD SHALL BE MINIMUM OF KTK 10 AMP AND MAXIMUM OF KTK 30 AMP AND LIGHT POLE FUSES SHALL BE KTK 5 AMP. FUSES SHALL NOT BE PERMITTED IN POLE HAND HOLE
19. FUSE ASSEMBLIES SHALL BE (1) BUSSMAN HEB-JJ, WITH (2) BUSSMAN 2AO660 INSULATION BOOTS. NO SUBSTITUTIONS.
20. " SQUID" TERMINAL BLOCK ASSEMBLY SHALL BE BLACKBURN USB33S OR USB43S. NO SUBSTITUTIONS.
21. POD, STREET LIGHT (FUSE), JUNCTION, AND PULL BOXES SHALL CONSIST OF (2) CARSON BROOKS 12" DEEP STANDARD SIZE BOXES BOLTED TOGETHER 'CLAMSHELL' STYLE. DRILL ¼" HOLES IN EVERY CELL OF LOWER (FLOOR) LID TO ALLOW DRAINAGE. INSTALL BOX ASSEMBLY ON 4" OF ¾" GRAVEL. NO SUBSTITUTIONS.
22. STREET LIGHTS ARE TO BE CENTERED IN PARK STRIP.
23. IF FIXTURE IS NOT INDICATED FOR INSTALLATION WITH CURRENT CONTRACT, ONLY CONDUIT IS REQUIRED. SOME CONDUCTORS INDICATED MAY BE REQUIRED WITH FIXTURE UPGRADES.
24. POLES FOR OUTDOOR LIGHTING FIXTURES FOR THE ILLUMINATION OF PARKING AREAS AND LOCATED DIRECTLY BEHIND PARKING SPACES, OR WHERE THEY COULD BE HIT BY SNOW PLOWS, SHALL BE PLACED A MINIMUM OF FIVE (5) FEET OUTSIDE PAVED AREAS OR TIRE STOPS, OR PLACED ON CONCRETE PEDESTALS AT LEAST THIRTY (30) INCHES HIGH ABOVE THE PAVEMENT.
25. ADDITIONAL REQUIREMENTS MAY APPLY IN UDOT RIGHT OF WAYS.
26. WHERE OVERHEAD POWER LINES ARE PRESENT, POLE HEIGHT MAY REQUIRE REDUCTION IN HEIGHT TO OBSERVE MINIMUM CLEARANCE REQUIRED BY POWER UTILITY.
27. ALL STREET LIGHT CONDUIT IS TO BE PLACED WITHIN 1 FT OF THE FRONT OF THE SIDEWALK IN THE CITY ROW.
28. PHOTOCELL WILL FACE NORTH. VERIFY LUMINAIRE DIRECTION.

STREET LIGHT DETAILS

DATE: MARCH 2020 | DRAWING NAME: LP-1 | DRAWN BY: JRP | CHECKED: | APPROVED: | REVISIONS: REVISION | DATE | BY | COMMENTS | SARATOGA SPRINGS CITY | STANDARD DETAILS | STREET LIGHTS | **LP-1**

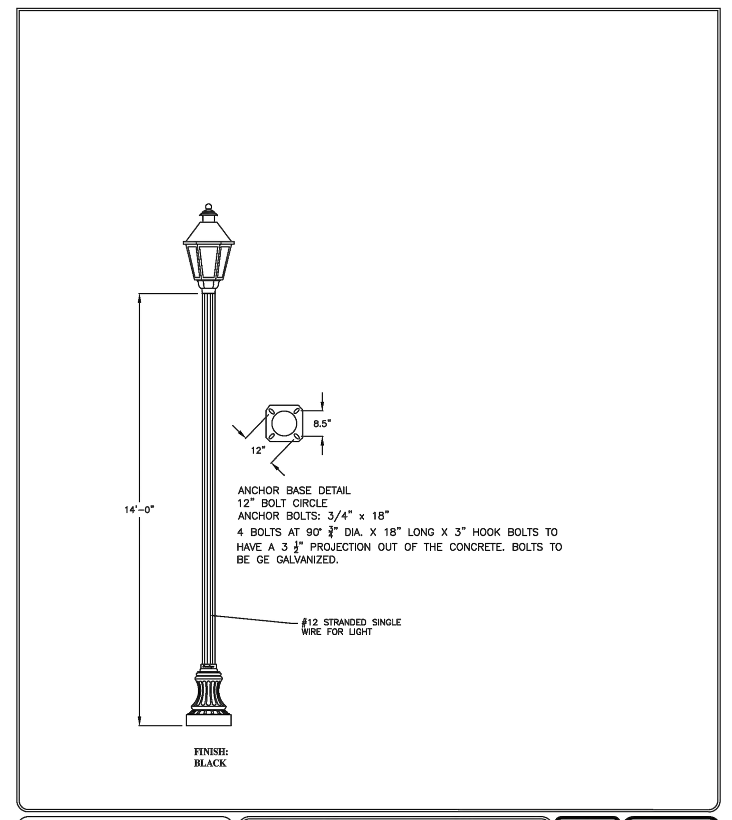

14' LOCAL STREET LIGHT

DATE: MARCH 2022 | DRAWING NAME: LP-1A | DRAWN BY: JRP | CHECKED: | APPROVED: | SARATOGA SPRINGS CITY | STANDARD DETAILS | STREET LIGHTS | **LP-1A**

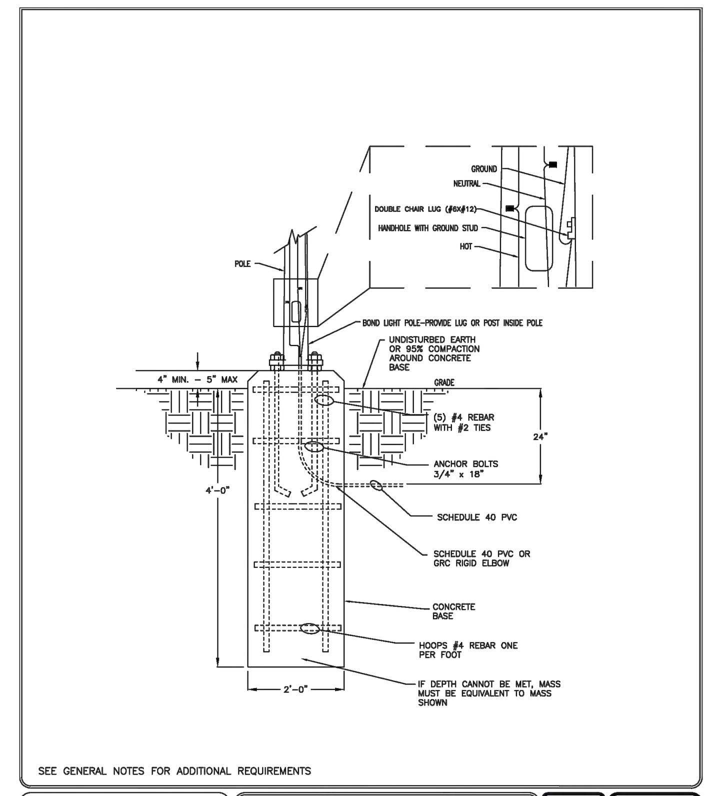

CONCRETE BASE FOR LOCAL STREET LIGHT

DATE: AUGUST 2022 | DRAWING NAME: LP-1B | DRAWN BY: JRP | CHECKED: | APPROVED: | SARATOGA SPRINGS CITY | STANDARD DETAILS | STREET LIGHTS | **LP-1B**

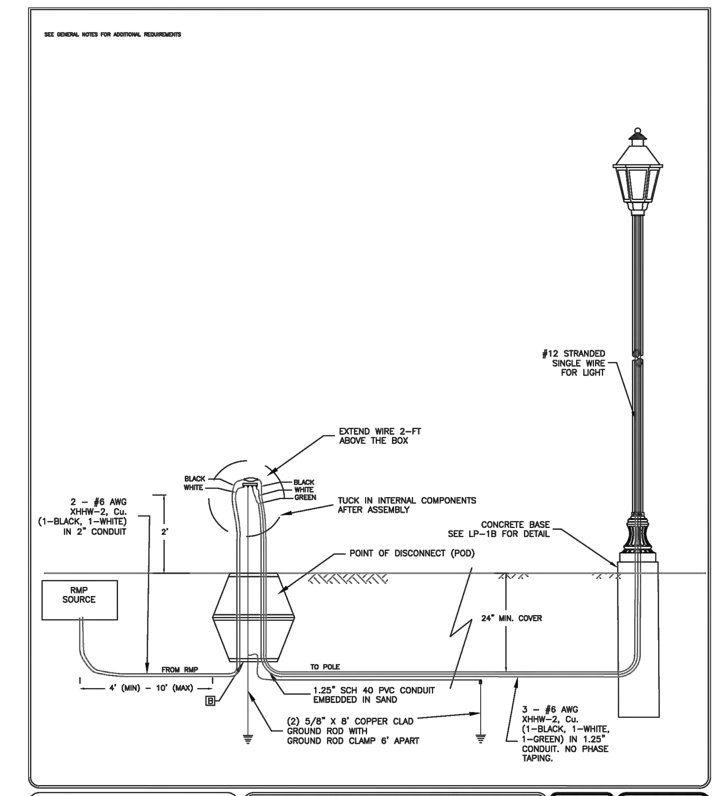

LOCAL STREET LIGHT CONNECTION

DATE: AUGUST 2022 | DRAWING NAME: LP-4 | DRAWN BY: JRP | CHECKED: | APPROVED: | SARATOGA SPRINGS CITY | STANDARD DETAILS | STREET LIGHTS | **LP-4**

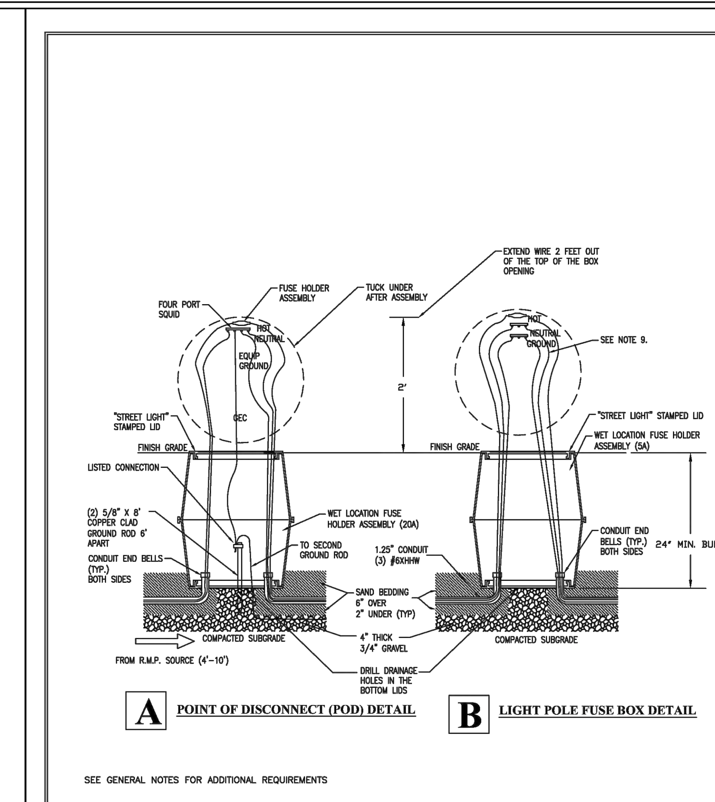

LIGHT POLE BELOW GRADE BOXES INSTALLATION

DATE: AUGUST 2022 | DRAWING NAME: LP-6 | DRAWN BY: JRP | CHECKED: | APPROVED: | SARATOGA SPRINGS CITY | STANDARD DETAILS | LANDSCAPING | **LP-6**

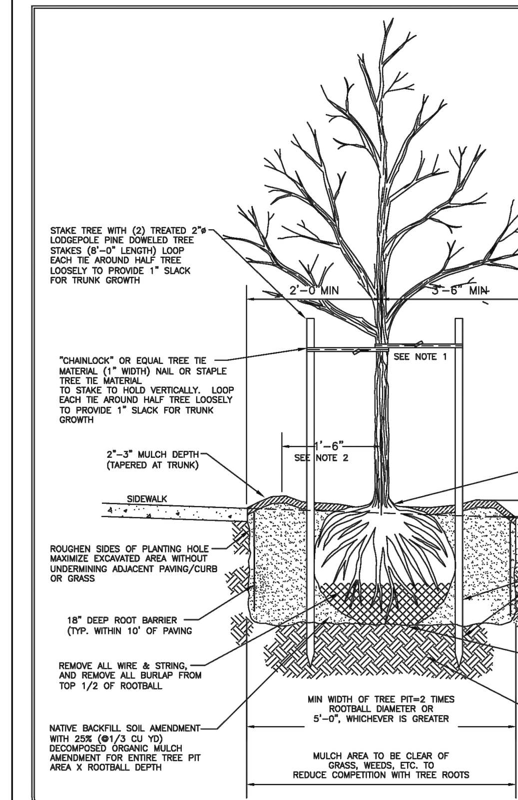

NOTES:

1. INSTALLATION INCLUDES REMOVAL OF STAKES AND WATERING RING ONE YEAR AFTER INSTALLATION.
2. SHAPE SOIL SURFACE TO PROVIDE 3' DIAMETER WATERING RING.
3. MULCH TREE PIT MIN 5'-0" LENGTH x FULL PLANTING STRIP WIDTH BETWEEN CURB AND SIDEWALK (FOR PLANTING STRIPS LESS THAN 6'-0"WIDE.) PROVIDE 5'-0"ø MULCH RING FOR PLANTING STRIPS WIDER THAN 6'-0".
4. TREE PIT DEPTH = ROOTBALL DEPTH (MEASURE BEFORE DIGGING TO AVOID OVER EXCAVATION).
5. GRANULAR FERTILIZER PLACE AFTER PLANT HOLE IS BACKFILLED. QUANTITY BASED ON TREE GROWERS RECOMMENDATIONS.
6. DO NOT PLANT STREET TREES WITHIN 70' OF STOP SIGNS.

TREE STAKING AND PLANTING

DATE: MARCH 2022 | DRAWING NAME: LS-13 | DRAWN BY: JRP | CHECKED: | APPROVED: | SARATOGA SPRINGS CITY | STANDARD DETAILS | LANDSCAPING | **LS-13**

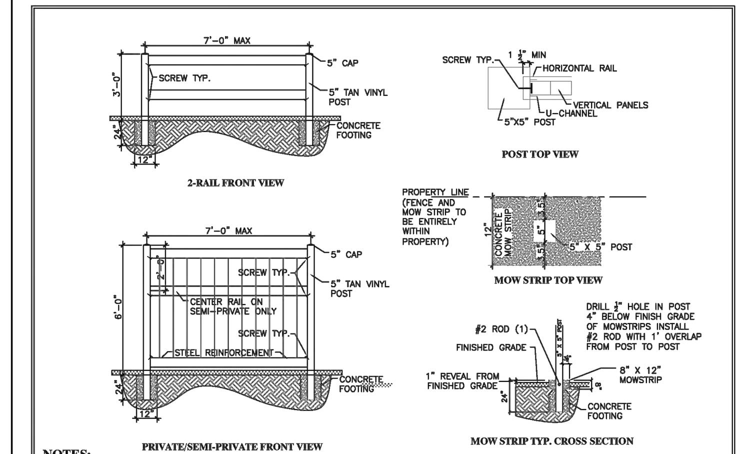

NOTES:

1. ALL ATTACHMENT SCREWS TO BE ZINC PLATED
2. FENCING SUB-CONTRACTOR TO PROVIDE SHOP DRAWINGS FOR ALL FENCING
3. GLUE ON CAPS WITH CLEAR PVC CEMENT
4. EXTEND RAIL AND STIFFENER INTO EACH POST 1 ½" MINIMUM.
5. MAXIMUM DISTANCE FROM CENTER OF POST TO CENTER OF POST IS 7'.
6. PROVIDE 12" MINIMUM CIRCUMFERENCE HOLE FOR POST WITH A MINIMUM BURY DEPTH OF 24".
7. USE WET MIX CONCRETE ONLY. ALLOW TO SET FOR 5 DAYS BEFORE SETTING RAILS. MINIMUM 3,000 PSI MIX.
8. USE VERTICAL U-CHANNEL ON ALL PRIVACY FENCING POSTS TO SUPPORT FENCE PANELS. ON SEMI PRIVATE FENCING USE WHERE PANELS ARE ADJACENT TO POSTS. SCREW SPACING ON U-CHANNELS TO BE 18" MAX. WITH A MINIMUM OF 2 SCREWS PER SEGMENT.
9. ATTACH ALL RAILS TO POSTS WITH FULL SHANK THREADED, ZINC PLATED, WOOD SCREWS (2"). "CRIMPED ENDS" ON RAILS NOT ACCEPTABLE. SECURE SCREW THROUGH POST AND INTO RAIL FROM UNDERNEATH THE HORIZONTAL RAIL EXCEPT ON BOTTOM RAIL WHERE SCREW CAN BE INSTLLED FROM THE TOP.
10. MATERIALS, CONSTRUCTION, AND WORKMANSHIP SHALL BE IN ACCORDANCE WITH CITY'S STANDARD SPECIFICATIONS.
11. COMPACT NATIVE SOIL BELOW MOW STRIP TO 90%.
12. FENCING COLOR TO BE DETERMINED UPON FINAL PLAT APPROVAL.

Privacy Fence	Post	Horizontal Rail	Vertical Planks
Wall thickness	0.15"	0.09"	0.06"
Dimension	5"x5", 6' tall above grade	1½" X 5½"	⅞" X 6"
Reinforcement Steel/Alum.	NO	Bottom Rail only	NO
Type	Square	rectangular	T & G rectangular
Spacing	7' on Center	N/A	0"
Semi-Private	**Post**	**Horizontal Rail**	**Vertical Planks**
Wall thickness	0.15"	0.09"	0.06"
Dimension	5"x5", 6' tall above grade	1½" X 3½"	⅞" X 3"
Reinforcement Steel/Alum.	NO	Bottom rail only	NO
Type	square	Rectangular	Rectangular
Spacing	7' on center	Approx. 2' from top of post	1" Gap
Two Rail Fence	**Post**	**Horizontal Rail**	**Vertical Planks**
Wall thickness	0.15"	0.125"	N/A
Dimension	5"x5", 3' tall above grade	2" X 6"	N/A
Reinforcement Steel/Alum.	NO	NO	NO
Type	square	rectangular	rectangular
Spacing	7' on center	aprox. 16" apart	N/A

VINYL FENCE WITH MOW STRIP

DATE: MARCH 2022 | DRAWING NAME: LS-14 | DRAWN BY: JRP | CHECKED: | APPROVED: | SARATOGA SPRINGS CITY | STANDARD DETAILS | LANDSCAPING | **LS-14**

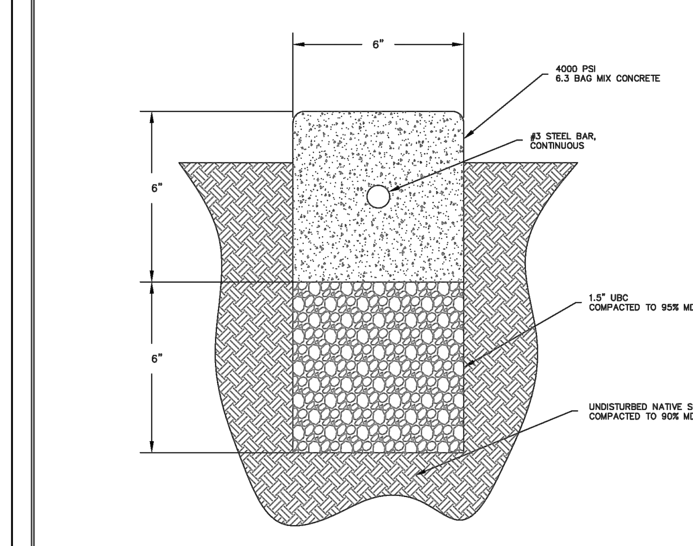

NOTE:

1. SCORE CURB 1.5" EVERY 5'

CONCRETE MOW CURB

DATE: AUGUST 2022 | DRAWING NAME: LS-15 | DRAWN BY: ETL | CHECKED: | APPROVED: | SARATOGA SPRINGS CITY | STANDARD DETAILS | LANDSCAPING | **LS-15**

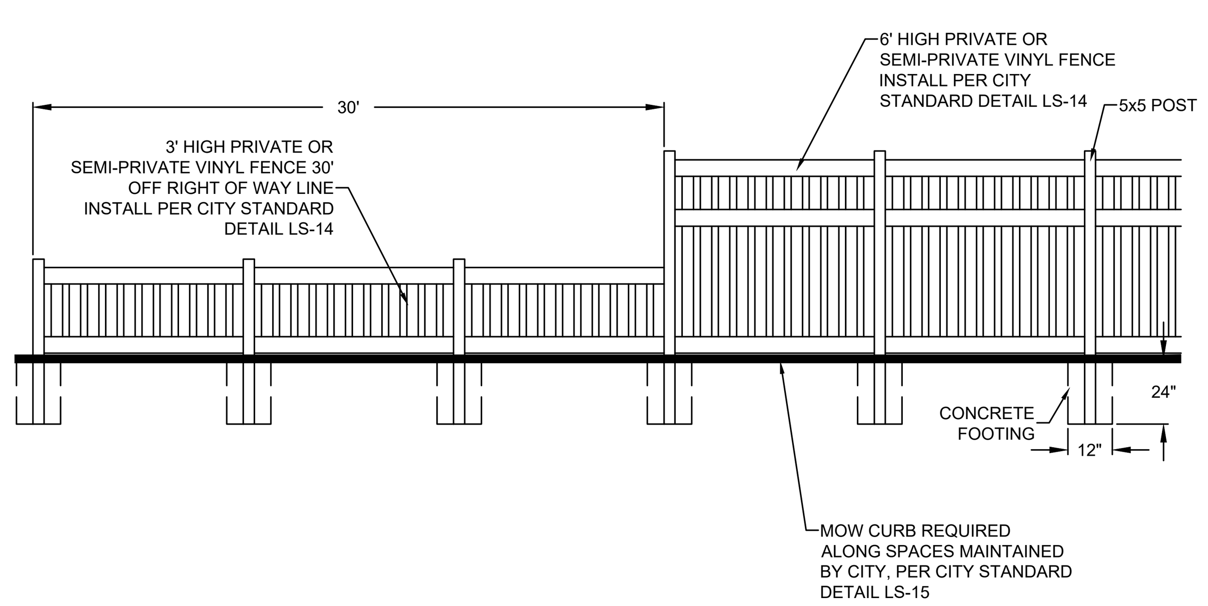

FENCING DETAIL

LEI
- A Utah Corporation -
ENGINEERS
SURVEYORS
PLANNERS
3302 N. Main Street
Spanish Fork, UT 84660
Phone: 801.798.0555
Fax: 801.798.9393
office@lei-eng.com
www.lei-eng.com

STATE OF UTAH
GREGORY D MAGLEBY
No. 189844
12/23/2025
REGISTERED PROFESSIONAL ENGINEER

WILDFLOWER - VILLAGE 9 - PLAT X-3

CITY OF SARATOGA SPRINGS, UTAH COUNTY, UTAH

DETAILS

REVISIONS

1 -
2 -
3 -
4 -
5 -

LEI PROJECT #: 2023-0055

DRAWN BY: BLS/MJV

CHECKED BY: GDM

SCALE: NONE (PRINTED ON 24x36)

DATE: 12/23/2025

SHEET

C-902

CALL BEFORE YOU DIG! IT'S THE LAW BLUE STAKES 1-800-662-4111

U:\LAND DESKTOP PROJECTS\13-0902 DAI COLLINS BROTHERS\DWG\VILLAGE 9\V9 PLAT X-3\23-0055 X-3 (901-906) DETAILS.DWG 12/5/2025 4:03 PM

U:\LAND DESKTOP PROJECTS\13-0902 DAI COLLINS BROTHERS\DWG\VILLAGE 9\V9 PLAT X-3\23-0055 X-3 (901-906) DETAILS.DWG 12/5/2025 4:03 PM

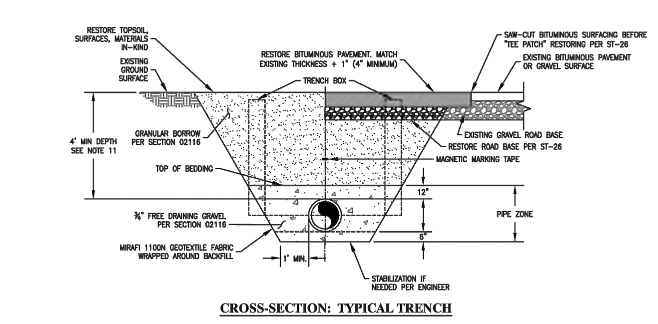

CROSS-SECTION: TYPICAL TRENCH

NOTES:

1. CONTRACTOR SHALL LOCATE ALL UNDERGROUND UTILITIES BEFORE LAYING PIPE WITHIN 300' OF SAID UTILITIES WHICH MAY BE EXPOSED, DAMAGED OR CROSSED AS SHOWN ON THE DRAWINGS OR AS "BLUE STAKED". THE CONTRACTOR WILL MAKE ARRANGEMENTS WITH THE UTILITY COMPANY TO MOVE THE UTILITY IF NECESSARY OR OBTAIN PERMISSION FROM THE CITY ENGINEER TO MODIFY GRADE OF PIPELINE IN ORDER TO GO AROUND UTILITIES.
2. PROVIDE GEOTECHNICAL REPORT. FOLLOW RECOMMENDATIONS OF GEOTECHNICAL REPORT
3. PIPE ZONE SHALL BE PLACED IN LIFTS AND TAMPED
4. TRENCHES SHALL BE COMPACTED IN LIFTS TO 95% DENSITY
5. GEOTEXTILE FABRIC IS REQUIRED WHERE EVIDENCE OF EXISTING OR PAST GROUNDWATER CONDITIONS ARE PRESENT. THESE LOCATIONS ARE TYPICALLY EAST OF REDWOOD RD AND SOUTH OF CROSSROADS BLVD.
6. ANY DAMAGE TO EXISTING UTILITIES SHALL BE REPAIRED AT THE SOLE EXPENSE OF THE PARTY WHO DAMAGED THE UTILITY.
7. THE MINIMUM CLEAR WIDTH OF THE TRENCH, MEASURED AT THE SPRING LINE OF THE PIPE, SHOULD BE 12 INCHES GREATER THAN THE DIAMETER OF THE PIPE. IN ROCKY SUB-GRADES, 18" OF CLEARANCE SHALL BE PROVIDED ON ALL SIDES OF PIPE.
8. INSTALL MAGNETIC DETECTOR TAPE 3' ABOVE PIPE AND LOOP TO GROUND SURFACE IN VALVE BOXES PER DW-15.
9. THE CITY RECOMMENDS CONTRACTOR MEET ALL OF THE REQUIREMENTS ESTABLISHED FOR SAFE TRENCHING. (SEE OSHA AND UOSH REQUIREMENTS, LATEST EDITIONS).
10. WHERE COLLAPSIBLE SOILS ARE ENCOUNTERED, FURNISH, PLACE AND COMPACT IMPORTED BACKFILL MATERIALS AS REQUIRED AND AS DIRECTED.
11. MINIMUM COVER OVER TOP OF PIPE SHALL BE 48-INCHES BELOW THE FINISHED GRADE. THIS DEPTH MAY BE INCREASED AS REQUIRED TO MISS UNDERGROUND UTILITIES, STORM DRAINS, OR OTHER OBSTRUCTIONS, OR WHERE INDICATED ON THE DRAWINGS.
12. FURNISH AND INSTALL POLY-WRAP ON DUCTILE IRON PIPE.

DRINKING WATER PIPE TRENCH — DATE: SEP 2023; DRAWING NAME: DW-1; DRAWN BY: JRP; CHECKED: APPROVED: — REVISIONS: REVISION | DATE | BY | COMMENTS — SARATOGA SPRINGS CITY — STANDARD DETAILS — DRINKING WATER — **DW-1**

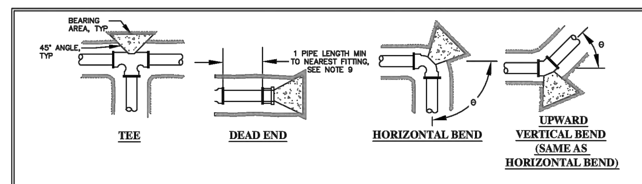

FOR REDUCERS, CROSSES, AND DEAD END VALVES USE ALTERNATIVE RESTRAINT PER DW-2C AND DW-2D

TABLE 1: SOIL BEARING STRENGTH

SOIL TYPE	BEARING STRENGTH (lb/ft²)
FINE GRAINED (CLAYS & SILTS)	1,000
GRANULAR (SAND & GRAVEL WITH OR WITHOUT CLAY & SILT)	3,000

NOTE: VALUES FROM DUCTILE IRON PIPE RESEARCH ASSOCIATION.

SAFE BEARING LOAD FORMULA

THRUST BLOCK AREA AGAINST TRENCH WALL (SQUARE FEET) = 1.5 x THRUST ON FITTING (LBS) SEE TABLE 2 / BEARING STRENGTH (LBS/SQ FT) SEE TABLE 1

TABLE 2: THRUST ON FITTING (LBS) AT 200 PSI PRESSURE

PIPE SIZE (IN)	TEES DEAD-ENDS	90° BEND	45° BEND	22.5° BEND	11.25° BEND
6	7,697	9,624	4,328	2,207	1,109
8	12,724	14,217	7,694	3,923	1,971
10	19,007	22,215	12,022	6,129	3,079
12	26,547	31,989	17,312	8,826	4,434
14	35,343	43,540	23,564	12,013	6,036
16	45,396	56,869	30,777	15,690	7,883
18	56,706	71,975	38,953	19,858	9,977
20	69,272	88,858	48,090	24,516	12,317
24	98,175	127,955	69,249	35,303	17,737

TABLE 3: REQUIRED THRUST BLOCK BEARING AREA (SQ FT) FINE GRAINED SOILS (CLAYS & SILTS)

PIPE SIZE (IN)	TEES DEAD-ENDS	90° BEND	45° BEND	22.5° BEND	11.25° BEND
6	12	15	7	4	2
8	20	22	12	6	3
10	29	34	19	10	5
12	40	48	26	14	7
14	54	66	36	19	10
16	69	86	47	24	12
18	86	108	59	30	15
20	104	134	73	37	19
24	148	192	104	53	27

TABLE 4: REQUIRED THRUST BLOCK BEARING AREA (SQ FT) GRANULAR SOILS (SAND & GRAVEL WITH OR WITHOUT CLAY & SILT)

PIPE SIZE (IN)	TEES DEAD-ENDS	90° BEND	45° BEND	22.5° BEND	11.25° BEND
6	4	5	3	2	1
8	7	8	4	2	1
10	10	12	7	4	2
12	14	16	9	5	3
14	18	22	12	7	4
16	23	29	16	8	4
18	29	36	20	10	5
20	35	45	25	13	7
24	50	64	35	18	9

NOTES:

1. CONCRETE THRUST BLOCKS ARE NOT ALLOWED UNDER PAVED SURFACES WITHIN PUBLIC RIGHT OF WAYS, I.E. BETWEEN INITIAL AND FUTURE CURB LINES. ALL PIPE FITTINGS WITHIN THE PUBLIC RIGHT OF WAY SHALL BE RESTRAINED PER DW-2C AND DW-2D OR SHALL BE DESIGNED AND SPECIFIED BY THE PROJECT ENGINEER.
2. RESTRAINED PIPE JOINTS MAY BE USED AS AN ALTERNATIVE TO THRUST BLOCKS PER DW-2C AND DW-2D.
3. MINIMUM SIZE OF THRUST BLOCK SHALL BE DETERMINED FROM THE TABLES ON THIS DRAWING.
4. CONCRETE MIX STRENGTH SHALL BE 2,000 PSI MIN.
5. PLACE CONCRETE AGAINST UNDISTURBED SOIL.
6. CAPS OR PLUGS SHALL BE LOCATED 1 PIPE LENGTH, IE, 18 FEET MINIMUM, FROM NEAREST FITTING OR JOINT.
7. FITTINGS SHALL BE POLYETHYLENE WRAPPED PRIOR TO PLACING CONCRETE THRUST BLOCK. CARE SHOULD BE TAKEN TO ASSURE THAT THE JOINT, INCLUDING BOLTS WILL BE ACCESSIBLE AFTER PLACING THE THRUST BLOCK.
8. RESTRAINT SIZING IS BASED UPON A MAXIMUM OPERATING PRESSURE OF 150 PSI, A TEST PRESSURE OF 200 PSI, AND A MINIMUM SOIL BEARING STRENGTH INDICATED IN TABLE 1 ABOVE AND UP TO 24" DIAMETER. CONDITIONS WITH PRESSURES, SOILS, OR PIPE SIZE OUTSIDE OF THESE LIMITS REQUIRE A PROJECT SPECIFIC DESIGN.
9. SITE SPECIFIC HORIZONTAL BEARING STRENGTH VALUES MAY BE USED TO CALCULATE THRUST BLOCK SIZES IF A SITE SPECIFIC GEOTECHNICAL REPORT HAS BEEN PREPARED FOR THE SPECIFIC SITE IDENTIFYING SOIL BEARING STRENGTH.
10. IF A SITE SPECIFIC GEOTECHNICAL REPORT HAS BEEN PREPARED WITH SPECIFIC SITE SOIL BEARING STRENGTH, SITE SPECIFIC HORIZONTAL THRUST BLOCK SIZES MAY BE CALCULATED AND SUBMITTED TO THE CITY FOR CONSIDERATION.
11. FITTINGS SHALL BE POLYETHYLENE WRAPPED PRIOR TO PLACING CONCRETE THRUST BLOCK. CARE SHOULD BE TAKEN TO ASSURE THAT THE JOINT, INCLUDING BOLTS WILL BE ACCESSIBLE AFTER PLACING THE THRUST BLOCK.
12. THRUST BLOCK BEARING AREA SHALL BE ROUNDED UP TO NEAREST WHOLE NUMBER.

CONCRETE THRUST BLOCKS — DATE: OCTOBER 2023; DRAWING NAME: DW-2; DRAWN BY: ABO; CHECKED: APPROVED: — REVISIONS: REVISION | DATE | BY | COMMENTS — SARATOGA SPRINGS CITY — STANDARD DETAILS — DRINKING WATER — **DW-2**

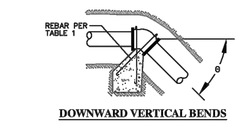

THRUST BLOCK VOLUME FORMULA FOR DOWNWARD VERTICAL BENDS

THRUST BLOCK VOLUME (CUBIC FEET) = THRUST ON FITTING (LBS) SEE TABLE 2 DW-2 / UNIT WEIGHT OF CONCRETE (150 LBS/CU FT)

TABLE 1: FOR 45° BEND VERTICAL DOWNWARD BENDS WITHOUT GROUNDWATER

PIPE SIZE	BAR SIZE	EMBEDMENT LENGTH (FT)	# OF BARS	CONCRETE VOLUME (FT ^3)
6	3	1	1	29
8	4	2	1	52
10	4	2	1	81
12	5	2	1	116
14	5	2	2	158
16	6	2	2	206
18	6	2	3	260
20	7	3	2	321
24	8	4	3	462

TABLE 2: FOR 22.5° BEND VERTICAL DOWNWARD BENDS WITHOUT GROUNDWATER

PIPE SIZE	BAR SIZE	EMBEDMENT LENGTH (FT)	# OF BARS	CONCRETE VOLUME (FT ^3)
6	3	1	1	15
8	3	1	1	27
10	4	2	1	41
12	4	2	1	59
14	5	2	1	81
16	5	2	1	105
18	6	2	1	133
20	6	2	1	164
24	6	2	3	236

TABLE 3: FOR 11.25° BEND VERTICAL DOWNWARD BENDS WITHOUT GROUNDWATER

PIPE SIZE	BAR SIZE	EMBEDMENT LENGTH (FT)	# OF BARS	CONCRETE VOLUME (FT ^3)
6	3	1	1	8
8	3	1	1	14
10	3	1	1	21
12	3	1	1	30
14	4	2	1	41
16	4	2	1	53
18	4	2	1	67
20	5	2	1	83
24	6	2	1	119

NOTES:

1. CONCRETE THRUST BLOCKS (OR ANCHORS) ARE NOT ALLOWED UNDER PAVED SURFACES WITHIN PUBLIC RIGHT OF WAYS, I.E. BETWEEN INITIAL AND FUTURE CURB LINES. ALL PIPE FITTINGS WITHIN PUBLIC RIGHT OF WAYS SHALL BE RESTRAINED PER DW-2C AND DW-2D OR SHALL BE DESIGNED AND SPECIFIED BY THE PROJECT ENGINEER.
2. RESTRAINED PIPE JOINTS MAY BE USED AS AN ALTERNATIVE TO THRUST BLOCKS PER DW-2C AND DW-2D.
3. REINFORCING BARS REQUIRED FOR HANGING THRUST BLOCKS SHALL BE EPOXY COATED.
4. MINIMUM SIZE OF THRUST ANCHORS SHALL BE DETERMINED FROM THE TABLES ON THIS DRAWING.
5. CONCRETE MIX STRENGTH SHALL BE 2,000 PSI MIN.
6. THRUST ANCHORS FOR PIPE SIZES LARGER THAN 24" SHALL BE DESIGNED BY THE PROJECT ENGINEER.
7. FITTINGS SHALL BE POLYETHYLENE WRAPPED PRIOR TO PLACING CONCRETE THRUST ANCHOR. CARE SHOULD BE TAKEN TO ASSURE THAT THE JOINT, INCLUDING BOLTS WILL BE ACCESSIBLE AFTER PLACING THE THRUST ANCHOR.
8. THRUST BLOCK BEARING AREA SHALL BE ROUNDED TO THE NEAREST WHOLE NUMBER.
9. RESTRAINT SIZING IS BASED UPON A MAXIMUM OPERATING PRESSURE OF 150 PSI AND A TEST PRESSURE OF 200 PSI.

CONCRETE THRUST ANCHORS FOR DOWNWARD VERTICAL BENDS IN DRY SOIL CONDITIONS — DATE: OCTOBER 2023; DRAWING NAME: DW-2A; DRAWN BY: ABO; CHECKED: APPROVED: — REVISIONS: REVISION | DATE | BY | COMMENTS — SARATOGA SPRINGS CITY — STANDARD DETAILS — DRINKING WATER — **DW-2A**

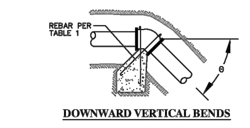

THRUST BLOCK VOLUME FORMULA FOR DOWNWARD VERTICAL BENDS

THRUST BLOCK VOLUME (CUBIC FEET) = THRUST ON FITTING (LBS) SEE TABLE 2 DW-2 / UNIT WEIGHT OF CONCRETE (150 LBS/CU FT)

TABLE 1: FOR 45° BEND VERTICAL DOWNWARD BENDS IN GROUNDWATER

PIPE SIZE	BAR SIZE	EMBEDMENT LENGTH (FT)	# OF BARS	CONCRETE VOLUME (FT ^3)
6	3	1	1	49
8	4	2	1	87
10	4	2	1	137
12	5	2	1	197
14	5	2	2	268
16	6	2	2	350
18	6	2	3	443
20	7	3	3	546
24	8	4	3	787

TABLE 2: FOR 22.5° BEND VERTICAL DOWNWARD BENDS IN GROUNDWATER

PIPE SIZE	BAR SIZE	EMBEDMENT LENGTH (FT)	# OF BARS	CONCRETE VOLUME (FT ^3)
6	3	1	1	25
8	3	1	1	45
10	4	2	1	70
12	4	2	1	100
14	5	2	1	137
16	5	2	1	178
18	6	2	1	226
20	6	2	1	279
24	6	2	3	401

TABLE 3: FOR 12.25° BEND VERTICAL DOWNWARD BENDS IN GROUNDWATER

PIPE SIZE	BAR SIZE	EMBEDMENT LENGTH (FT)	# OF BARS	CONCRETE VOLUME (FT ^3)
6	3	1	1	13
8	3	1	1	22
10	3	1	1	35
12	3	1	1	50
14	4	2	1	69
16	4	2	1	90
18	4	2	1	113
20	5	2	1	140
24	6	2	1	202

NOTES:

1. CONCRETE THRUST BLOCKS (OR ANCHORS) ARE NOT ALLOWED UNDER PAVED SURFACES WITHIN PUBLIC RIGHT OF WAYS, I.E. BETWEEN INITIAL AND FUTURE CURB LINES. ALL PIPE FITTINGS WITHIN PUBLIC RIGHT OF WAYS SHALL BE RESTRAINED PER DW-2C AND DW-2D OR SHALL BE DESIGNED AND SPECIFIED BY THE PROJECT ENGINEER.
2. RESTRAINED PIPE JOINTS MAY BE USED AS AN ALTERNATIVE TO THRUST BLOCKS PER DW-2C AND DW-2D.
3. REINFORCING BARS REQUIRED FOR HANGING THRUST BLOCKS SHALL BE EPOXY COATED.
4. MINIMUM SIZE OF THRUST ANCHORS SHALL BE DETERMINED FROM THE TABLES ON THIS DRAWING.
5. CONCRETE MIX STRENGTH SHALL BE 2,000 PSI MIN.
6. THRUST ANCHORS FOR PIPE SIZES LARGER THAN 24" SHALL BE DESIGNED BY THE PROJECT ENGINEER.
7. FITTINGS SHALL BE POLYETHYLENE WRAPPED PRIOR TO PLACING CONCRETE THRUST ANCHOR. CARE SHOULD BE TAKEN TO ASSURE THAT THE JOINT, INCLUDING BOLTS WILL BE ACCESSIBLE AFTER PLACING THE THRUST ANCHOR.
8. THRUST BLOCK BEARING AREA SHALL BE ROUNDED TO THE NEAREST WHOLE NUMBER.
9. RESTRAINT SIZING IS BASED UPON A MAXIMUM OPERATING PRESSURE OF 150 PSI AND A TEST PRESSURE OF 200 PSI.

CONCRETE THRUST ANCHORS FOR DOWNWARD VERTICAL BENDS WHERE SIGNS OF GROUNDWATER ARE PRESENT — DATE: OCTOBER 2023; DRAWING NAME: DW-2A; DRAWN BY: ABO; CHECKED: APPROVED: — REVISIONS: REVISION | DATE | BY | COMMENTS — SARATOGA SPRINGS CITY — STANDARD DETAILS — DRINKING WATER — **DW-2B**

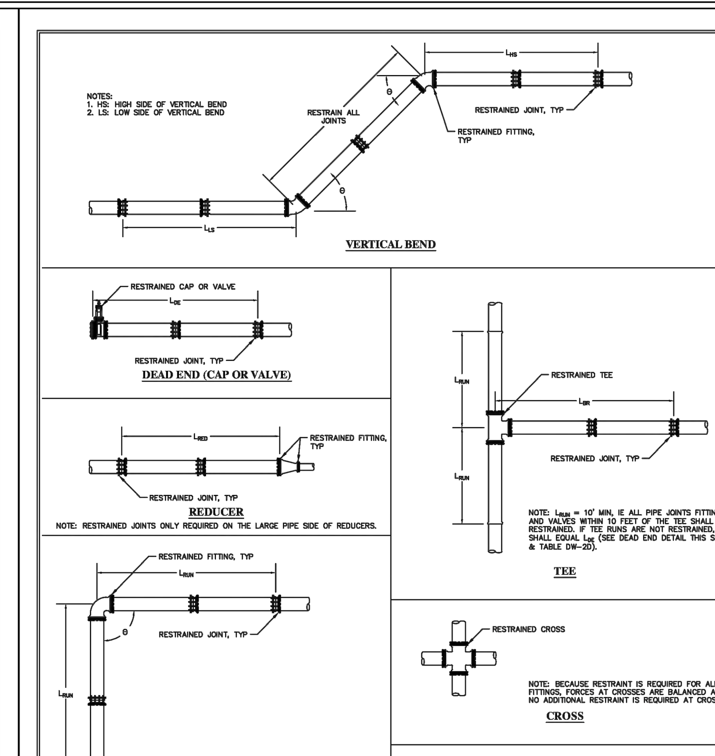

SHEET NOTES:

1. MULTIPLE STYLES OF RESTRAINED FITTINGS ARE ACCEPTABLE. SUBMITTALS ARE REQUIRED.
2. IF RESTRAINTS ARE EXTERNAL TO THE BELL OF THE PIPE AND EVIDENCE OF GROUNDWATER IS PRESENT, THE RESTRAINT FITTING SHALL BE WRAPPED IN A THREE PART EPOXY COATING BY DENSO OR TRENTON.

ALTERNATIVE THRUST RESTRAINT — DATE: APRIL 2024; DRAWING NAME: DW-17; DRAWN BY: ABO; CHECKED: APPROVED: — REVISIONS: REVISION | DATE | BY | COMMENTS — SARATOGA SPRINGS CITY — STANDARD DETAILS — DRINKING WATER — **DW-2C**

PIPE RESTRAINT TABLES

PVC

BENDS AND DEAD ENDS

MINIMUM LENGTH OF PIPE TO BE RESTRAINED (FT)

SIZE	HORIZONTAL BEND 90° L_{RUN}	45° L_{RUN}	22.5° L_{RUN}	VERTICAL BEND 45° L_{HS}	45° L_{LS}	22.5° L_{HS}	22.5° L_{LS}	DEAD ENDS L_{DE}
6"	14	6	3	18	6	9	3	43
8"	18	8	4	24	8	11	4	57
10"	23	9	5	29	9	14	5	70
12"	27	11	5	35	11	17	5	84
14"	31	13	6	40	13	19	6	96
16"	36	15	7	45	15	22	7	109
18"	40	17	8	50	17	24	8	121
20"	44	18	9	55	18	27	9	133
24"	53	22	11	65	22	31	11	157

TEES

MINIMUM LENGTH OF PIPE (L_{BR}) TO BE RESTRAINED (FT)

BRANCH SIZE \ RUN SIZE	6"	8"	10"	12"	14"	16"	18"	20"	24"
6"	20	20	20	20	20	20	20	20	20
8"		20	20	20	20	20	20	20	20
10"			20	20	20	20	20	20	20
12"				21	20	20	20	20	20
14"					35	26	20	20	20
16"						48	40	32	20
18"							61	54	41
20"								73	61
24"									98

REDUCERS

MINIMUM LENGTH OF PIPE (L_{RED}) TO BE RESTRAINED (FT)

	6"	8"	10"	12"	14"	16"	18"	20"
8"	25							
10"	45	25						
12"	63	46	26					
14"	79	65	47	26				
16"	94	82	66	48	26			
18"	108	97	84	67	48	25		
20"	121	112	100	85	68	48	25	
24"	147	139	130	118	103	87	69	48

DUCTILE IRON (WRAPPED)

BENDS AND DEAD ENDS

MINIMUM LENGTH OF PIPE TO BE RESTRAINED (FT)

SIZE	HORIZONTAL BEND 90° L_{RUN}	45° L_{RUN}	22.5° L_{RUN}	VERTICAL BEND 45° L_{HS}	45° L_{LS}	22.5° L_{HS}	22.5° L_{LS}	DEAD ENDS L_{DE}
6"	16	7	3	34	7	16	3	82
8"	21	9	4	45	9	21	4	108
10"	27	11	5	55	11	26	5	133
12"	32	13	6	65	13	31	6	158
14"	37	15	7	75	15	36	7	182
16"	42	18	8	85	18	41	8	206
18"	48	20	9	95	20	46	9	229
20"	53	22	10	104	22	50	10	252
24"	63	26	13	123	26	59	13	296

TEES

MINIMUM LENGTH OF PIPE (L_{BR}) TO BE RESTRAINED (FT)

BRANCH SIZE \ RUN SIZE	6"	8"	10"	12"	14"	16"	18"	20"	24"
6"	18	18	18	18	18	18	18	18	18
8"		18	18	18	18	18	18	18	18
10"			18	18	18	18	18	18	18
12"				40	18	18	18	18	18
14"					65	48	32	18	18
16"						90	76	61	32
18"							115	102	77
20"								139	116
24"									185

REDUCERS

MINIMUM LENGTH OF PIPE (L_{RED}) TO BE RESTRAINED (FT)

	6"	8"	10"	12"	14"	16"	18"	20"
8"	47							
10"	85	48						
12"	118	88	48					
14"	149	123	89	48				
16"	177	155	126	90	48			
18"	204	184	159	127	91	48		
20"	229	212	189	161	129	91	48	
24"	278	263	245	222	195	165	130	91

NOTES:

1. PIPE SIZES LARGER THAN 24" SHALL BE RESTRAINED PER DESIGN ENGINEER RECOMMENDATION AND CITY ENGINEER APPROVAL.
2. TABLES ASSUME THE PIPE ZONE SOILS ARE SAND AND THE DESIGN PRESSURE IS 200 PSI.
3. IF A THRUST BLOCK IS USED ON A FITTING WITHIN THE REQUIRED RESTRAINED DISTANCE, THE LENGTH OF RESTRAINED PIPE SHALL BE DECREASED TO THE LENGTH OF PIPE FROM THE FITTING TO THE THRUST BLOCK.
4. IN CONDITIONS WITH INDICATIONS OF GROUNDWATER, THRUST RESTRAINT FITTINGS SHALL BE WRAPPED WITH THREE PART WAX TAPE COATING SYSTEM BY DENSO OR TRENTON.

ALTERNATIVE THRUST RESTRAINT TABLES — DATE: APRIL 2024; DRAWING NAME: DW-17A; DRAWN BY: ABO; CHECKED: APPROVED: — REVISIONS: REVISION | DATE | BY | COMMENTS — SARATOGA SPRINGS CITY — STANDARD DETAILS — DRINKING WATER — **DW-2D**

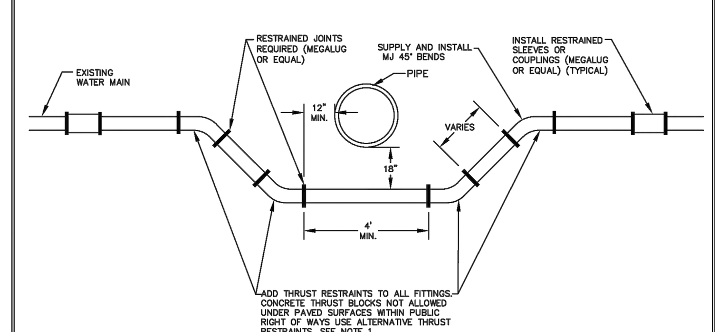

NOTES:

1. CONCRETE THRUST BLOCKS ARE NOT ALLOWED UNDER PAVED SURFACES WITHIN PUBLIC RIGHT OF WAYS, I.E. BETWEEN INITIAL AND FUTURE CURB LINES. ALL PIPE FITTINGS SHALL BE RESTRAINED PER DW-17 OR SHALL BE DESIGNED AND SPECIFIED BY THE PROJECT ENGINEER.
2. CITY TO BE GIVEN 72 HOUR NOTICE BEFORE LOOPING ANY WATERLINE WHEN SHUT OFF IS REQUIRED
3. A CASE OR SLEEVE IS REQUIRED WHEN CROSSING DRINKING WATER UNDER SANITARY AND STORM SEWER.

DRINKING WATERLINE LOOP — DATE: OCTOBER 2023; DRAWING NAME: DW-3; DRAWN BY: ABO; CHECKED: APPROVED: — REVISIONS: REVISION | DATE | BY | COMMENTS — SARATOGA SPRINGS CITY — STANDARD DETAILS — DRINKING WATER — **DW-3**

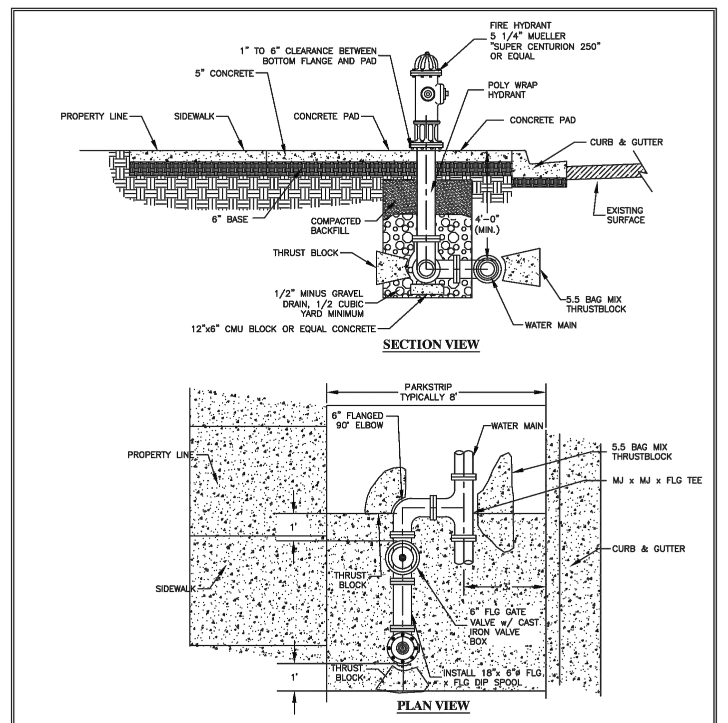

NOTES:

1. HYDRANT SHALL BE "TRAFFIC" TYPE WITH A REPLACEABLE BREAK-AWAY UNIT IMMEDIATELY ABOVE GROUND.
2. IN NON PARKSTRIP AREAS, HYDRANT PAD SHALL BE MINIMUM 4-FT x 4-FT

FIRE HYDRANT CONNECTION — DATE: MARCH 2022; DRAWING NAME: DW-4; DRAWN BY: JRP; CHECKED: APPROVED: — REVISIONS: REVISION | DATE | BY | COMMENTS — SARATOGA SPRINGS CITY — STANDARD DETAILS — DRINKING WATER — **DW-4**

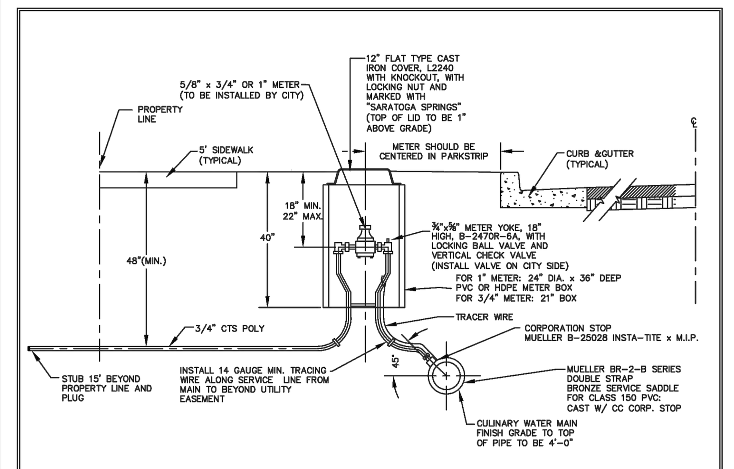

NOTES:

1. INSPECTION: METER BOX AND SERVICE LINE SHALL BE INSPECTED BY CITY PRIOR TO BACKFILLING.
2. BACKFILL: INSTALL BACKFILL IN LIFTS NOT EXCEEDING 8" AFTER COMPACTION. COMPACT EACH LIFT TO AN AVERAGE DRY DENSITY OF 95% WITH NO DENSITY TEST RESULT LESS THAN 92%.
3. CONTRACTOR TO SUPPLY ALL MATERIALS EXCLUDING METER
4. METER BOXES SHOULD BE PVC OR HDPE.
5. PIPE: INSTALL MINIMUM 3/4" CTS POLY PIPE (SDR-9) FROM MAIN TO METER AND FROM METER TO BUILDING. MINIMUM 1" POLYETHYLENE PIPE TO BE USED IN COMMERCIAL AREAS. INSTALL TRACING WIRE FROM MAIN LINE TO METER.
6. PLACEMENT: ALL METERS ARE TO BE INSTALLED IN THE PARK STRIP 5-FT FROM PROPERTY LINE AND MUST NOT BE LOCATED IN A DRIVEWAY OR IN A SIDEWALK.
7. METER YOKE TO BE MUELLER B-2470R-6A, OR ACCEPTABLE EQUAL
9. SERVICE SADDLES SHALL BE MUELLER BR-2-B SERIES, OR EQUAL
11. METER LID TO BE 1" ABOVE LINE GRADE OF WALK/CURB
12. STAINLESS STEEL LINER INSERTS WILL BE REQUIRED INSIDE OF TUBING AT COMPRESSION FITTINGS.
13. WATER SERVICES SHALL BE STUBBED TO A POINT APPROXIMATELY 1' BEYOND UTILITY EASEMENT (PUE).
14. 1" METER INSTALLATION TO BE SIMILAR USING 1" METER, PIPE, AND FITTINGS.

RESIDENTIAL METER CONNECTION 3/4" x 5/8" OR 1" — DATE: MARCH 2022; DRAWING NAME: DW-5; DRAWN BY: JRP; CHECKED: APPROVED: — REVISIONS: REVISION | DATE | BY | COMMENTS — SARATOGA SPRINGS CITY — STANDARD DETAILS — DRINKING WATER — **DW-5**

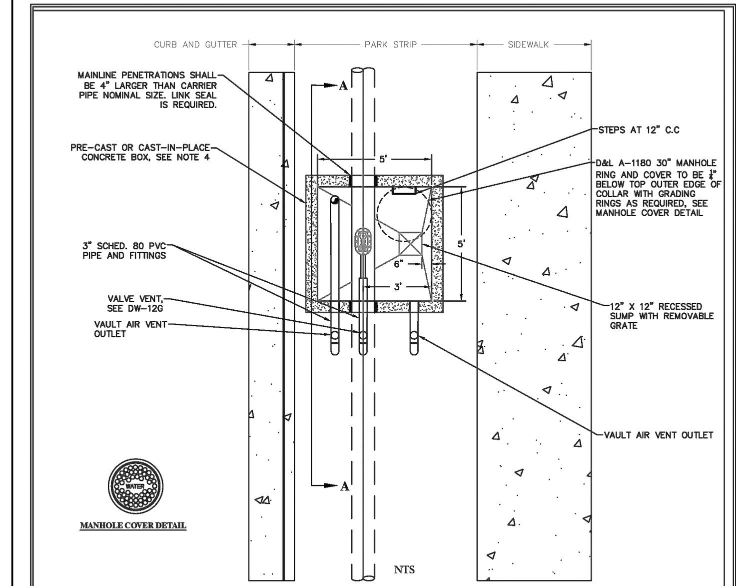

NOTES:

1. THIS DETAIL ONLY APPLIES TO ROAD SECTIONS ST-8, ST-9A, ST-10. APPLICATIONS FOR OTHER PUBLIC ROADWAY SECTIONS MUST BE A CUSTOM DETAIL THAT HAS BEEN SUBMITTED TO AND ACCEPTED BY THE CITY ENGINEER.
2. SIZE OF AIR-VACUUM RELIEF VALVE & PIPING SHALL BE 2" UNLESS OTHERWISE DIRECTED BY THE CITY ENGINEER.
3. BOLLARDS AROUND VENT COVER NOT REQUIRED UNLESS OTHERWISE DIRECTED BY CITY INSPECTOR.
4. A PRECAST BOX SHALL BE H-20 LOADING WITH NO HORIZONTAL JOINTS THROUGH THE PIPE OPENINGS. A SEPARATE DETAIL CAST-IN-PLACE VAULT BOX MUST BE ACCEPTED BY THE CITY ENGINEER PRIOR TO CONSTRUCTION.
5. THE FLOOR SHALL BE SLOPED AT A 2% MINIMUM TO MEET FLUSH WITH THE RIM OF THE SUMP.

SHEET NOTES:

1. THIS DETAIL INCLUDES DW-12A, DW-12B, & DW-12G.

AIR VACUUM RELIEF VALVE IN PUBLIC ROW PLAN VIEW — DATE: OCTOBER 2023; DRAWING NAME: DW-12; DRAWN BY: ABO; CHECKED: APPROVED: — REVISIONS: REVISION | DATE | BY | COMMENTS — SARATOGA SPRINGS CITY — STANDARD DETAILS — DRINKING WATER — **DW-12A**

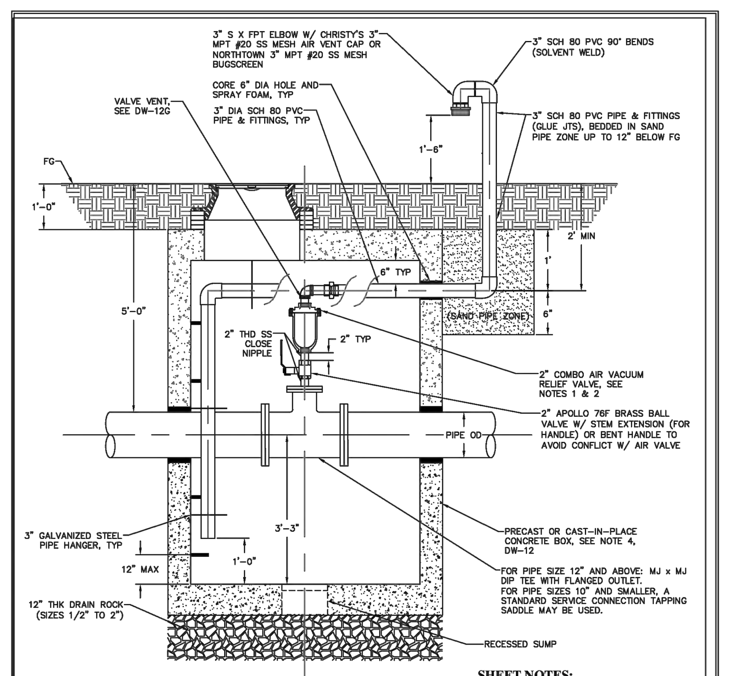

AIR VACUUM RELIEF VALVE SECTION A

NTS

SHEET NOTES:

1. THIS DETAIL INCLUDES DW-12A, DW-12B, AND DW-12G

NOTES:

1. COMBO AIR VACUUM RELIEF VALVE SHALL BE VENT-O-MAT 050RBX 1921 S4 (4 FUNCTION), APCO, SINGLE BODY MODEL AVC 145C, ARI D-60, OR VALMATIC 202C. VALVE SHALL BE TREADED OR FLANGED DEPENDING ON MANUFACTURER.
2. AIR VALVE SHALL BE INSTALLED PLUMB WITHIN 3 DEGREES OF VERTICAL ALIGNMENT
3. DRINKING WATER PIPLINE IS DEEPER THAN STANDARD BURY DEPTH. ENSURE APPROACHING PIPES DO NOT CREATE ADDITIONAL LOCALIZED HIGH POINTS.

AIR VACUUM RELIEF VALVE IN PUBLIC ROW — DATE: OCTOBER 2023; DRAWING NAME: DW-12.1A; DRAWN BY: ABO; CHECKED: APPROVED: — REVISIONS: REVISION | DATE | BY | COMMENTS — SARATOGA SPRINGS CITY — STANDARD DETAILS — DRINKING WATER — **DW-12B**

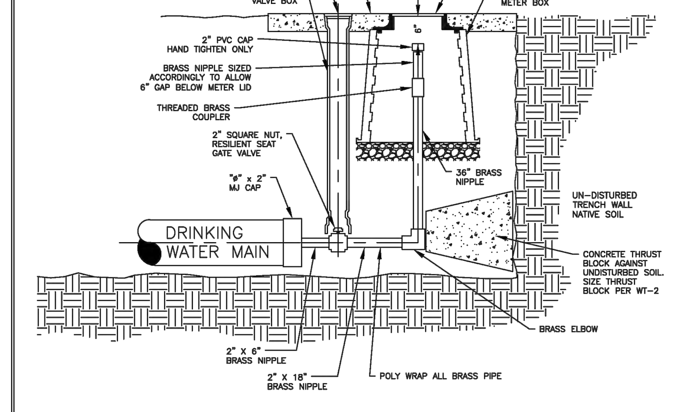

2" BLOW-OFF VALVE — DATE: MARCH 2022; DRAWING NAME: DW-13A; DRAWN BY: JRP; CHECKED: APPROVED: — REVISIONS: REVISION | DATE | BY | COMMENTS — SARATOGA SPRINGS CITY — STANDARD DETAILS — DRINKING WATER — **DW-13A**

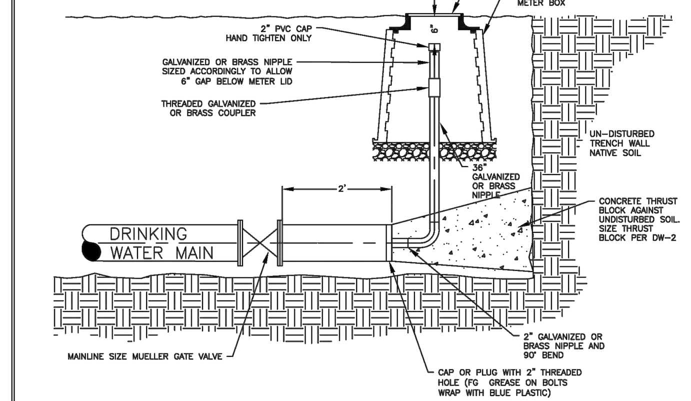

TEMPORARY 2" BLOW-OFF VALVE — DATE: MARCH 2022; DRAWING NAME: DW-13B; DRAWN BY: JRP; CHECKED: APPROVED: — REVISIONS: REVISION | DATE | BY | COMMENTS — SARATOGA SPRINGS CITY — STANDARD DETAILS — DRINKING WATER — **DW-13B**

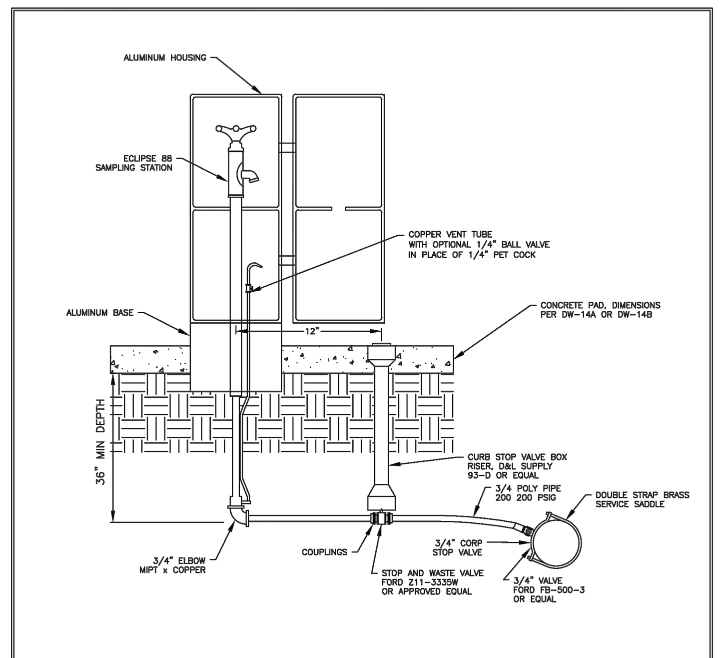

NOTES:

1. ONE SAMPLING STATION REQUIRED IN EACH RESIDENTIAL DEVELOPMENT AND A MINIMUM OF ONE SAMPLING STATION PER 100 LOTS.
2. SAMPLE STATIONS TO BE LOCATED ON A LOT LINE.
3. PRIOR TO BACKFILLING AROUND THE ASSEMBLY, SECURE INSPECTION OF INSTALLATION BY ENGINEER.
4. PROVIDE BRASS FITTINGS AND NIPPLES IF NOT SPECIFIED OTHERWISE.

SAMPLING STATION — DATE: APRIL 2024; DRAWING NAME: DW-14; DRAWN BY: ABO; CHECKED: APPROVED: — REVISIONS: REVISION | DATE | BY | COMMENTS — SARATOGA SPRINGS CITY — STANDARD DETAILS — DRINKING WATER — **DW-14**

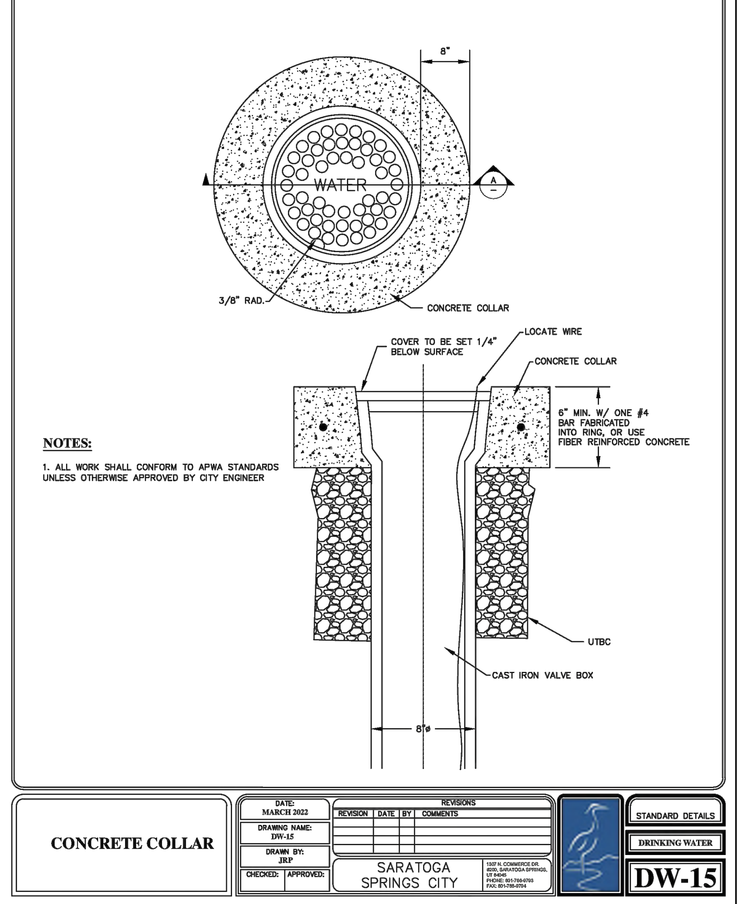

NOTES:

1. ALL WORK SHALL CONFORM TO APWA STANDARDS UNLESS OTHERWISE APPROVED BY CITY ENGINEER

CONCRETE COLLAR — DATE: MARCH 2022; DRAWING NAME: DW-15; DRAWN BY: JRP; CHECKED: APPROVED: — REVISIONS: REVISION | DATE | BY | COMMENTS — SARATOGA SPRINGS CITY — STANDARD DETAILS — DRINKING WATER — **DW-15**

LEI
- A Utah Corporation -
ENGINEERS
SURVEYORS
PLANNERS
3302 N. Main Street
Spanish Fork, UT 84660
Phone: 801.798.0555
Fax: 801.798.9393
office@lei-eng.com
www.lei-eng.com

STATE OF UTAH — GREGORY D MAGLEBY — No. 189844 — 12/23/2025 — REGISTERED PROFESSIONAL ENGINEER

WILDFLOWER - VILLAGE 9 - PLAT X-3

CITY OF SARATOGA SPRINGS, UTAH COUNTY, UTAH

DETAILS

REVISIONS

1 -
2 -
3 -
4 -
5 -

LEI PROJECT #: 2023-0055

DRAWN BY: BLS/MJV

CHECKED BY: GDM

SCALE: NONE (PRINTED ON 24x36)

DATE: 12/23/2025

SHEET

C-903

CALL BEFORE YOU DIG! IT'S THE LAW — BLUE STAKES 1-800-662-4111

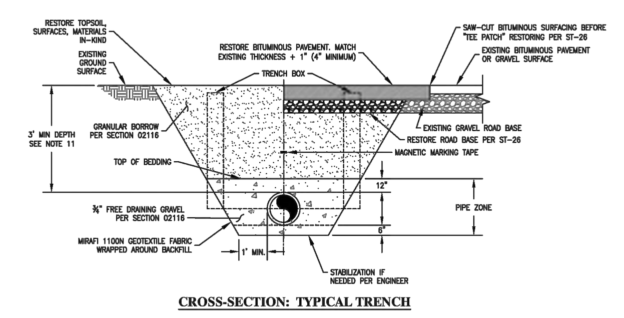

CROSS-SECTION: TYPICAL TRENCH

NOTES:
1. CONTRACTOR SHALL LOCATE ALL UNDERGROUND UTILITIES BEFORE LAYING PIPE WITHIN 300' OF SAID UTILITIES WHICH MAY BE EXPOSED, DAMAGED OR CROSSED AS SHOWN ON THE DRAWINGS OR AS "BLUE STAKED". THE CONTRACTOR WILL MAKE ARRANGEMENTS WITH THE UTILITY COMPANY TO MOVE THE UTILITY IF NECESSARY OR OBTAIN PERMISSION FROM THE CITY ENGINEER TO MODIFY GRADE OF PIPELINE IN ORDER TO GO AROUND UTILITIES.
2. PROVIDE GEOTECHNICAL REPORT. FOLLOW RECOMMENDATIONS OF GEOTECHNICAL REPORT
3. PIPE ZONE SHALL BE PLACED IN LIFTS AND TAMPED
4. TRENCHES SHALL BE COMPACTED IN LIFTS TO 95% DENSITY
5. GEOTEXTILE FABRIC IS REQUIRED WHERE EVIDENCE OF EXISTING OR PAST GROUNDWATER CONDITIONS ARE PRESENT. THESE LOCATIONS ARE TYPICALLY EAST OF REDWOOD RD AND SOUTH OF CROSSROADS BLVD.
6. ANY DAMAGE TO EXISTING UTILITIES SHALL BE REPAIRED AT THE SOLE EXPENSE OF THE PARTY WHO DAMAGED THE UTILITY.
7. THE MINIMUM CLEAR WIDTH OF THE TRENCH, MEASURED AT THE SPRING LINE OF THE PIPE, SHOULD BE 12 INCHES GREATER THAN THE DIAMETER OF THE PIPE. IN ROCKY SUB-GRADES, 18" OF CLEARANCE SHALL BE PROVIDED ON ALL SIDES OF PIPE.
8. INSTALL MAGNETIC DETECTOR TAPE 3' ABOVE PIPE OR 2' ABOVE PIPE WHEN PIPE IS SHALLOWER THAN 4' AND LOOP TRACING WIRE TO GROUND SURFACE IN VALVE BOXES PER DW-15.
9. THE CITY RECOMMENDS CONTRACTOR MEET ALL OF THE REQUIREMENTS ESTABLISHED FOR SAFE TRENCHING. (SEE OSHA AND UOSH REQUIREMENTS, LATEST EDITIONS).
10. WHERE COLLAPSIBLE SOILS ARE ENCOUNTERED, FURNISH, PLACE AND COMPACT IMPORTED BACKFILL MATERIALS AS REQUIRED PER SPECIFICATIONS.
11. MINIMUM COVER OVER TOP OF PIPE SHALL BE 36-INCHES BELOW THE FINISHED GRADE. THIS DEPTH MAY BE INCREASED AS REQUIRED TO MISS UNDERGROUND UTILITIES, STORM DRAINS, OR OTHER OBSTRUCTIONS, OR WHERE INDICATED ON THE DRAWINGS.
12. FURNISH AND INSTALL POLY-WRAP ON DUCTILE IRON PIPE.

PRESSURIZED IRRIGATION PIPE TRENCH

DATE: SEP 2023 | DRAWING NAME: PI-1 | DRAWN BY: JRP | CHECKED: | APPROVED:
REVISIONS: REVISION | DATE | BY | COMMENTS
SARATOGA SPRINGS CITY — 1307 N. COMMERCE DR. #200, SARATOGA SPRINGS, UT 84045 PHONE: 801-766-9793 FAX: 801-766-9794
STANDARD DETAILS — PRESSURIZED IRR — **PI-1**

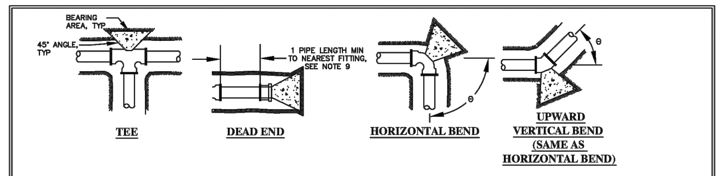

FOR REDUCERS, CROSSES, AND DEAD END VALVES USE ALTERNATIVE RESTRAINT PER DW-2C AND DW-2D

TABLE 1: SOIL BEARING STRENGTH

SOIL TYPE	BEARING STRENGTH (lb/ft²)
FINE GRAINED (CLAYS & SILTS)	1,000
GRANULAR (SAND & GRAVEL WITH OR WITHOUT CLAY & SILT)	3,000

NOTE: VALUES FROM DUCTILE IRON PIPE RESEARCH ASSOCIATION.

SAFE BEARING LOAD FORMULA

THRUST BLOCK AREA AGAINST TRENCH WALL (SQUARE FEET) = 1.5 X THRUST ON FITTING (LBS) SEE TABLE 2 / BEARING STRENGTH (LBS/SQ FT) SEE TABLE 1

TABLE 2:

THRUST ON FITTING (LBS) AT 200 PSI PRESSURE					
PIPE SIZE (IN)	TEES DEAD-ENDS	90° BEND	45° BEND	22.5° BEND	11.25° BEND
6	7,697	9,624	4,328	2,207	1,109
8	12,724	14,217	7,694	3,923	1,971
10	19,007	22,215	12,022	6,129	3,079
12	26,547	31,989	17,312	8,826	4,434
14	35,343	43,540	23,564	12,013	6,036
16	45,396	56,869	30,777	15,690	7,883
18	56,706	71,975	38,953	19,858	9,977
20	69,272	88,858	48,090	24,516	12,317
24	98,175	127,955	69,249	35,303	17,737

TABLE 3:

REQUIRED THRUST BLOCK BEARING AREA (SQ FT) FINE GRAINED SOILS (CLAYS & SILTS)					
PIPE SIZE (IN)	TEES DEAD-ENDS	90° BEND	45° BEND	22.5° BEND	11.25° BEND
6	12	15	7	4	2
8	20	22	12	6	3
10	29	34	19	10	5
12	40	48	26	14	7
14	54	66	36	19	10
16	69	86	47	24	12
18	86	108	59	30	15
20	104	134	73	37	19
24	148	192	104	53	27

TABLE 4:

REQUIRED THRUST BLOCK BEARING AREA (SQ FT) GRANULAR SOILS (SAND & GRAVEL WITH OR WITHOUT CLAY & SILT)					
PIPE SIZE (IN)	TEES DEAD-ENDS	90° BEND	45° BEND	22.5° BEND	11.25° BEND
6	4	5	3	2	1
8	7	8	4	2	1
10	10	12	7	4	2
12	14	16	9	5	3
14	18	22	12	7	4
16	23	29	16	8	4
18	29	36	20	10	5
20	35	45	25	13	7
24	50	64	35	18	9

NOTES:
1. CONCRETE THRUST BLOCKS ARE NOT ALLOWED UNDER PAVED SURFACES WITHIN PUBLIC RIGHT OF WAYS, I.E. BETWEEN INITIAL AND FUTURE CURB LINES. ALL PIPE FITTINGS WITHIN THE PUBLIC RIGHT OF WAY SHALL BE RESTRAINED PER DW-17 OR SHALL BE DESIGNED AND SPECIFIED BY THE PROJECT ENGINEER.
2. RESTRAINED PIPE JOINTS MAY BE USED AS AN ALTERNATIVE TO THRUST BLOCKS PER DW-17.
3. MINIMUM SIZE OF THRUST BLOCK SHALL BE DETERMINED FROM THE TABLES ON THIS DRAWING.
4. CONCRETE MIX STRENGTH SHALL BE 2,000 PSI MIN.
5. PLACE CONCRETE AGAINST UNDISTURBED SOIL.
6. CAPS OR PLUGS SHALL BE LOCATED 1 PIPE LENGTH, IE, 18 FEET MINIMUM, FROM NEAREST FITTING OR JOINT.
7. FITTINGS SHALL BE POLYETHYLENE WRAPPED PRIOR TO PLACING CONCRETE THRUST BLOCK. CARE SHOULD BE TAKEN TO ASSURE THAT THE JOINT, INCLUDING BOLTS WILL BE ACCESSIBLE AFTER PLACING THE THRUST BLOCK.
8. RESTRAINT SIZING IS BASED UPON A MAXIMUM OPERATING PRESSURE OF 150 PSI, A TEST PRESSURE OF 200 PSI, AND A MINIMUM SOIL BEARING STRENGTH INDICATED IN TABLE 1 ABOVE AND UP TO 24" DIAMETER. CONDITIONS WITH PRESSURES, SOILS, OR PIPE SIZE OUTSIDE OF THESE LIMITS REQUIRE A PROJECT SPECIFIC DESIGN.
9. SITE SPECIFIC HORIZONTAL BEARING STRENGTH VALUES MAY BE USED TO CALCULATE THRUST BLOCK SIZES IF A SITE SPECIFIC GEOTECHNICAL REPORT HAS BEEN PREPARED FOR THE SPECIFIC SITE IDENTIFYING SOIL BEARING STRENGTH.
10. IF A SITE SPECIFIC GEOTECHNICAL REPORT HAS BEEN PREPARED WITH SPECIFIC SITE SOIL BEARING STRENGTH, SITE SPECIFIC HORIZONTAL THRUST BLOCK SIZES MAY BE CALCULATED AND SUBMITTED TO THE CITY FOR CONSIDERATION.
11. FITTINGS SHALL BE POLYETHYLENE WRAPPED PRIOR TO PLACING CONCRETE THRUST BLOCK. CARE SHOULD BE TAKEN TO ASSURE THAT THE JOINT, INCLUDING BOLTS WILL BE ACCESSIBLE AFTER PLACING THE THRUST BLOCK.
12. THRUST BLOCK BEARING AREA SHALL BE ROUNDED UP TO NEAREST WHOLE NUMBER.

CONCRETE THRUST BLOCKS

DATE: OCTOBER 2023 | DRAWING NAME: PI-2 | DRAWN BY: ABO | CHECKED: | APPROVED:
REVISIONS: REVISION | DATE | BY | COMMENTS
SARATOGA SPRINGS CITY — 1307 N. COMMERCE DR. #200, SARATOGA SPRINGS, UT 84045 PHONE: 801-766-9793 FAX: 801-766-9794
STANDARD DETAILS — DRINKING WATER — **PI-2**

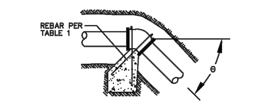

DOWNWARD VERTICAL BENDS

THRUST BLOCK VOLUME FORMULA FOR DOWNWARD VERTICAL BENDS

THRUST BLOCK VOLUME (CUBIC FEET) = THRUST ON FITTING (LBS) SEE TABLE 2 DW-2 / UNIT WEIGHT OF CONCRETE (150 LBS/CU FT)

TABLE 1:

FOR 45° BEND VERTICAL DOWNWARD BENDS WITHOUT GROUNDWATER				
PIPE SIZE	BAR SIZE	EMBEDMENT LENGTH (FT)	# OF BARS	CONCRETE VOLUME (FT ^3)
6	3	1	1	29
8	4	2	1	52
10	4	2	1	81
12	5	2	1	116
14	5	2	2	158
16	6	2	2	206
18	6	2	3	260
20	7	3	3	321
24	8	4	3	462

TABLE 2:

FOR 22.5° BEND VERTICAL DOWNWARD BENDS WITHOUT GROUNDWATER				
PIPE SIZE	BAR SIZE	EMBEDMENT LENGTH (FT)	# OF BARS	CONCRETE VOLUME (FT ^3)
6	3	1	1	15
8	3	1	1	27
10	4	2	1	41
12	4	2	1	59
14	5	2	1	81
16	5	2	1	105
18	6	2	1	133
20	6	2	1	164
24	6	2	3	236

TABLE 3:

FOR 11.25° BEND VERTICAL DOWNWARD BENDS WITHOUT GROUNDWATER				
PIPE SIZE	BAR SIZE	EMBEDMENT LENGTH (FT)	# OF BARS	CONCRETE VOLUME (FT ^3)
6	3	1	1	8
8	3	1	1	14
10	3	1	1	21
12	3	1	1	30
14	4	2	1	41
16	4	2	1	53
18	4	2	1	67
20	5	2	1	83
24	6	2	1	119

NOTES:
1. CONCRETE THRUST BLOCKS (OR ANCHORS) ARE NOT ALLOWED UNDER PAVED SURFACES WITHIN PUBLIC RIGHT OF WAYS, I.E. BETWEEN INITIAL AND FUTURE CURB LINES. ALL PIPE FITTINGS WITHIN PUBLIC RIGHT OF WAYS SHALL BE RESTRAINED PER DW-17 OR SHALL BE DESIGNED AND SPECIFIED BY THE PROJECT ENGINEER.
2. RESTRAINED PIPE JOINTS MAY BE USED AS AN ALTERNATIVE TO THRUST BLOCKS PER DW-17.
3. REINFORCING BARS REQUIRED FOR HANGING THRUST BLOCKS SHALL BE EPOXY COATED.
4. MINIMUM SIZE OF THRUST ANCHORS SHALL BE DETERMINED FROM THE TABLES ON THIS DRAWING.
5. CONCRETE MIX STRENGTH SHALL BE 2,000 PSI MIN.
6. THRUST ANCHORS FOR PIPE SIZES LARGER THAN 24" SHALL BE DESIGNED BY THE PROJECT ENGINEER.
7. FITTINGS SHALL BE POLYETHYLENE WRAPPED PROR TO PLACING CONCRETE THRUST ANCHOR. CARE SHOULD BE TAKEN TO ASSURE THAT THE JOINT, INCLUDING BOLTS WILL BE ACCESSIBLE AFTER PLACING THE THRUST ANCHOR.
8. THRUST BLOCK BEARING AREA SHALL BE ROUNDED TO THE NEAREST WHOLE NUMBER.
9. RESTRAINT SIZING IS BASED UPON A MAXIMUM OPERATING PRESSURE OF 150 PSI AND A TEST PRESSURE OF 200 PSI.

CONCRETE THRUST ANCHORS FOR DOWNWARD VERTICAL BENDS IN DRY SOIL CONDITIONS

DATE: OCTOBER 2023 | DRAWING NAME: DW-2A | DRAWN BY: ABO | CHECKED: | APPROVED:
REVISIONS: REVISION | DATE | BY | COMMENTS
SARATOGA SPRINGS CITY — 1307 N. COMMERCE DR. #200, SARATOGA SPRINGS, UT 84045 PHONE: 801-766-9793 FAX: 801-766-9794
STANDARD DETAILS — DRINKING WATER — **PI-2A**

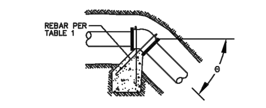

DOWNWARD VERTICAL BENDS

THRUST BLOCK VOLUME FORMULA FOR DOWNWARD VERTICAL BENDS

THRUST BLOCK VOLUME (CUBIC FEET) = THRUST ON FITTING (LBS) SEE TABLE 2 DW-2 / UNIT WEIGHT OF CONCRETE (150 LBS/CU FT)

TABLE 1:

FOR 45° BEND VERTICAL DOWNWARD BENDS IN GROUNDWATER				
PIPE SIZE	BAR SIZE	EMBEDMENT LENGTH (FT)	# OF BARS	CONCRETE VOLUME (FT ^3)
6	3	1	1	49
8	4	2	1	87
10	4	2	1	137
12	5	2	1	197
14	5	2	2	268
16	6	2	2	350
18	6	2	3	443
20	7	3	3	546
24	8	4	3	787

TABLE 2:

FOR 22.5° BEND VERTICAL DOWNWARD BENDS IN GROUNDWATER				
PIPE SIZE	BAR SIZE	EMBEDMENT LENGTH (FT)	# OF BARS	CONCRETE VOLUME (FT ^3)
6	3	1	1	25
8	3	1	1	45
10	4	2	1	70
12	4	2	1	100
14	5	2	1	137
16	5	2	1	178
18	6	2	1	226
20	6	2	1	279
24	6	2	3	401

TABLE 3:

FOR 12.25° BEND VERTICAL DOWNWARD BENDS IN GROUNDWATER				
PIPE SIZE	BAR SIZE	EMBEDMENT LENGTH (FT)	# OF BARS	CONCRETE VOLUME (FT ^3)
6	3	1	1	13
8	3	1	1	22
10	3	1	1	35
12	3	1	1	50
14	4	2	1	69
16	4	2	1	90
18	4	2	1	113
20	5	2	1	140
24	6	2	1	202

NOTES:
1. CONCRETE THRUST BLOCKS (OR ANCHORS) ARE NOT ALLOWED UNDER PAVED SURFACES WITHIN PUBLIC RIGHT OF WAYS, I.E. BETWEEN INITIAL AND FUTURE CURB LINES. ALL PIPE FITTINGS WITHIN PUBLIC RIGHT OF WAYS SHALL BE RESTRAINED PER DW-17 OR SHALL BE DESIGNED AND SPECIFIED BY THE PROJECT ENGINEER.
2. RESTRAINED PIPE JOINTS MAY BE USED AS AN ALTERNATIVE TO THRUST BLOCKS PER DW-17.
3. REINFORCING BARS REQUIRED FOR HANGING THRUST BLOCKS SHALL BE EPOXY COATED.
4. MINIMUM SIZE OF THRUST ANCHORS SHALL BE DETERMINED FROM THE TABLES ON THIS DRAWING.
5. CONCRETE MIX STRENGTH SHALL BE 2,000 PSI MIN.
6. THRUST ANCHORS FOR PIPE SIZES LARGER THAN 24" SHALL BE DESIGNED BY THE PROJECT ENGINEER.
7. FITTINGS SHALL BE POLYETHYLENE WRAPPED PRIOR TO PLACING CONCRETE THRUST ANCHOR. CARE SHOULD BE TAKEN TO ASSURE THAT THE JOINT, INCLUDING BOLTS WILL BE ACCESSIBLE AFTER PLACING THE THRUST ANCHOR.
8. THRUST BLOCK BEARING AREA SHALL BE ROUNDED TO THE NEAREST WHOLE NUMBER.
9. RESTRAINT SIZING IS BASED UPON A MAXIMUM OPERATING PRESSURE OF 150 PSI AND A TEST PRESSURE OF 200 PSI.

CONCRETE THRUST ANCHORS FOR DOWNWARD VERTICAL BENDS WHERE SIGNS OF GROUNDWATER ARE PRESENT

DATE: OCTOBER 2023 | DRAWING NAME: DW-2A | DRAWN BY: ABO | CHECKED: | APPROVED:
REVISIONS: REVISION | DATE | BY | COMMENTS
SARATOGA SPRINGS CITY — 1307 N. COMMERCE DR. #200, SARATOGA SPRINGS, UT 84045 PHONE: 801-766-9793 FAX: 801-766-9794
STANDARD DETAILS — DRINKING WATER — **PI-2B**

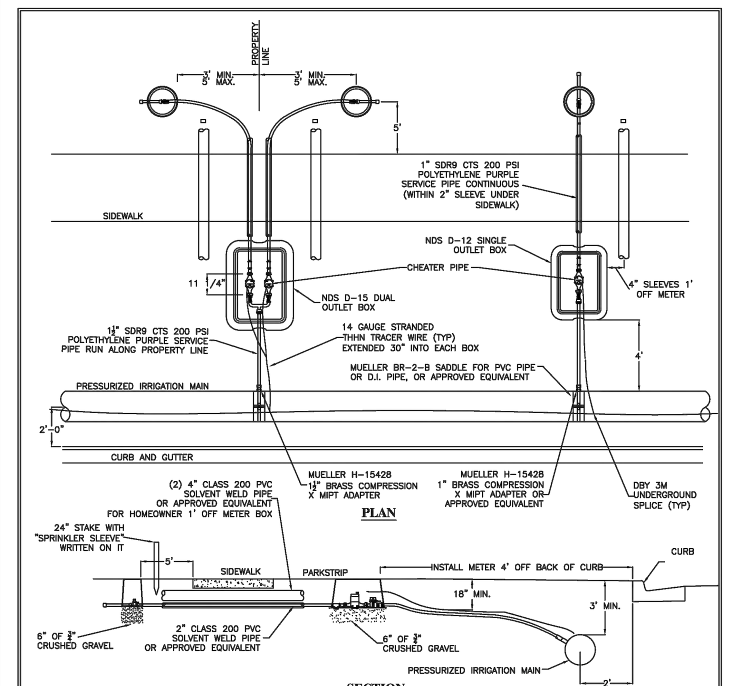

NOTES:
1. STANDARD SERVICE SIZE SHALL BE 1½" FOR DUAL SERVICES AND 1" FOR SINGLE SERVICES. SEE DETAIL PI-5A AND PI-5B FOR SERVICE BOX AND METER DETAILS
2. STAINLESS STEEL LINER INSERTS WILL BE REQUIRED INSIDE OF TUBING AT COMPRESSION FITTINGS.
3. ALL FITTINGS SHALL BE COMPATIBLE WITH SERVICE SIZE.
4. SERVICE LATERAL SHALL SLOPE TOWARDS PRESSURIZED IRRIGATION MAIN.
5. SPRINKLER SLEEVE SHALL NOT BE IN LINE WITH ANY UTILITY BOXES.
6. 4" SLEEVE SHALL BE BURIED 1' BELOW GRADE.
7. CHEATER PIPE TO BE EXACTLY 11 1/4" FROM FACE TO FACE.

1" SINGLE & DUAL SERVICE LATERALS

DATE: MARCH 2022 | DRAWING NAME: PI-3 | DRAWN BY: | CHECKED: | APPROVED:
REVISIONS: REVISION | DATE | BY | COMMENTS
SARATOGA SPRINGS CITY — 1307 N. COMMERCE DR. #200, SARATOGA SPRINGS, UT 84045 PHONE: 801-766-9793 FAX: 801-766-9794
STANDARD DETAILS — PRESSURIZED IRR — **PI-3**

***SEE DETAIL PI-3 FOR INSTALLATION DETAILS**

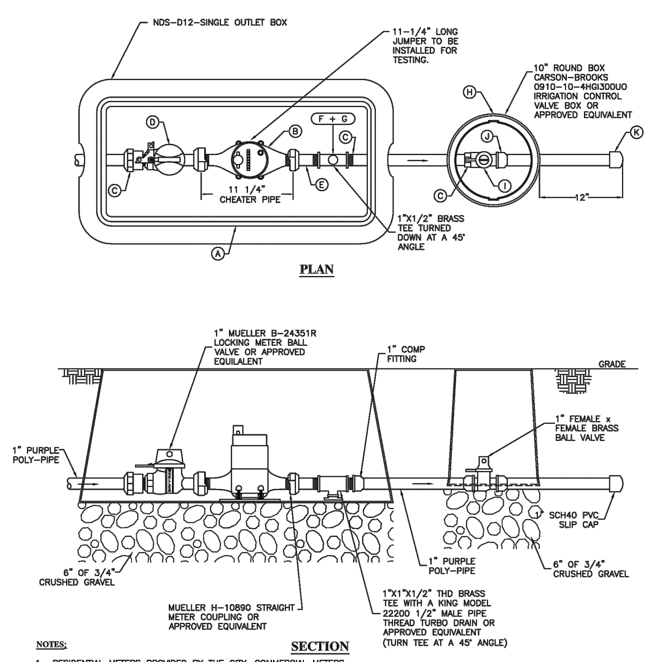

NOTES:
1. RESIDENTIAL METERS PROVIDED BY THE CITY. COMMERCIAL METERS PROVIDED BY THE CONTRACTOR.
2. ALL PIPES SHALL BE BURIED WITH 14 GAUGE STRANDED THHN TRACE WIRE
3. CHEATER PIPE TO BE EXACTLY 11' 1/4" FROM FACE TO FACE

1" SINGLE SERVICE LATERAL BOX

DATE: MARCH 2022 | DRAWING NAME: PI-5A | DRAWN BY: JRP | CHECKED: | APPROVED:
REVISIONS: REVISION | DATE | BY | COMMENTS
SARATOGA SPRINGS CITY — 1307 N. COMMERCE DR. #200, SARATOGA SPRINGS, UT 84045 PHONE: 801-766-9793 FAX: 801-766-9794
STANDARD DETAILS — PRESSURIZED IRR — **PI-5A**

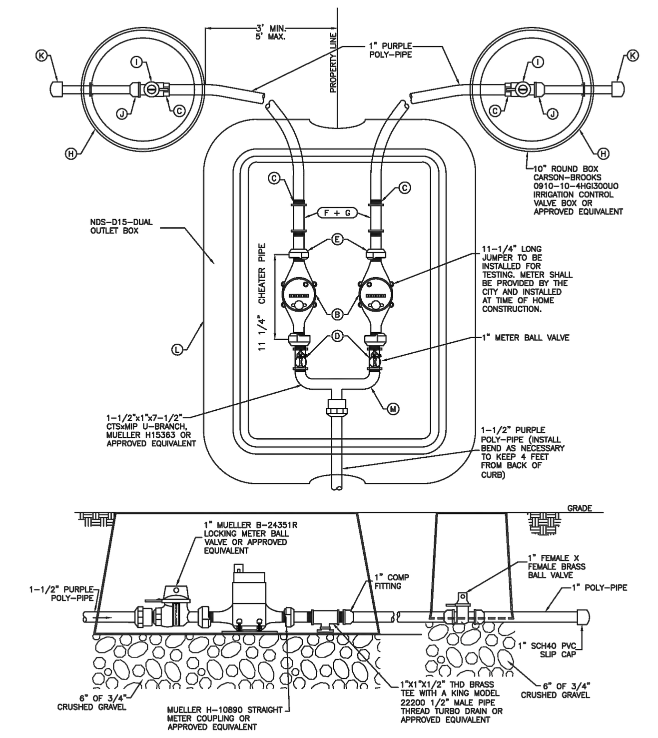

Note:
1. CHEATER PIPE TO BE EXACTLY 11' 1/4" FROM FACE TO FACE.

***SEE DETAIL PI-3 FOR INSTALLATION DETAILS**

1 1/2" DUAL SERVICE LATERAL BOX

DATE: MARCH 2022 | DRAWING NAME: PI-5B | DRAWN BY: JRP | CHECKED: | APPROVED:
REVISIONS: REVISION | DATE | BY | COMMENTS
SARATOGA SPRINGS CITY — 1307 N. COMMERCE DR. #200, SARATOGA SPRINGS, UT 84045 PHONE: 801-766-9793 FAX: 801-766-9794
STANDARD DETAILS — PRESSURIZED IRR — **PI-5B**

SCHEDULE OF PLUMBING MATERIAL FOR WATER METER BOXES

1" SINGLE SERVICE CONNECTION

ITEM	QUANTITY	DESCRIPTION
A	1ea	14"x19"x12" METER BOX W/ SINGLE OUTLET
B	1ea	1" METER (SUPPLIED AND INSTALLED BY CITY)
C	3ea	1" COUPLER CCT/MIPT H15428
D	1ea	1" STR BALL METER VALVE B24351R
E	1ea	1" STR METER COUPLER H10890
F	1ea	1"X1/2" BRASS TEE
G	1ea	1/2" MALE PIPE THREAD AUTO DRAIN
H	1ea	10" IRRIGATION VALVE BOX
I	1ea	1" BRASS BALL VALVE 600 WOG
J	1ea	1" MALE ADAPT SXM1PT SCH 40
K	1ea	1" SLIP CAP SHC 40

1 1/2" TO DUAL 1" SERVICE CONNECTION

ITEM	QUANTITY	DESCRIPTION
A	2ea	1" METER (SUPPLIED AND INSTALLED BY CITY)
B	4ea	1" COUPLER CCT/MIPT H15428
C	2ea	1" STR BALL METER VALVE B24351R
D	2ea	1" STR METER COUPLER H10890
E	2ea	1" BRASS TEE
F	2ea	1/2" MALE PIPE THREAD AUTO DRAIN
G	2ea	10" IRRIGATION VALVE BOX
H	2ea	1" BRASS BALL VALVE 600 WOG
I	2ea	1" MALE ADAPT SXM1PT SCH 40
J	2ea	1" SLIP CAP SHC 40
K	1ea	13"x20"x12" JUMBO METER BOX W/ DOUBLE OUTLET
L	1ea	1.5"X7.5" CTSxMIP U-BRANCH H15363

PARTS LIST FOR SINGLE AND DUAL SERVICE LATERAL BOXES

DATE: MARCH 2022 | DRAWING NAME: PI-5C | DRAWN BY: JRP | CHECKED: | APPROVED:
REVISIONS: REVISION | DATE | BY | COMMENTS
SARATOGA SPRINGS CITY — 1307 N. COMMERCE DR. #200, SARATOGA SPRINGS, UT 84045 PHONE: 801-766-9793 FAX: 801-766-9794
STANDARD DETAILS — PRESSURIZED IRR — **PI-5C**

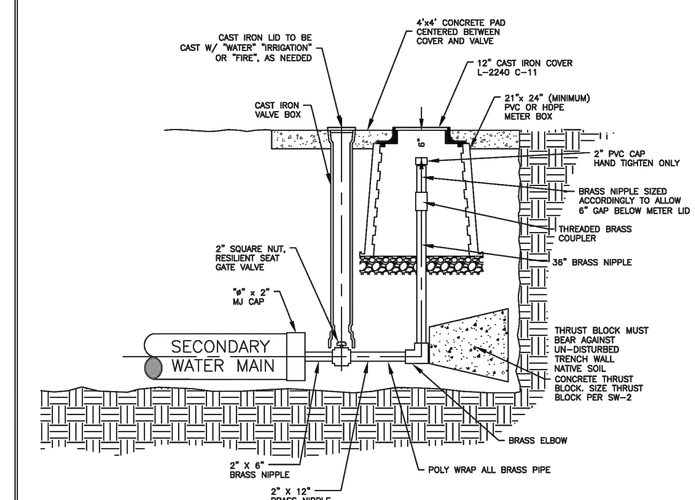

2" BLOW-OFF VALVE

DATE: MARCH 2022 | DRAWING NAME: PI-12A | DRAWN BY: JRP | CHECKED: | APPROVED:
REVISIONS: REVISION | DATE | BY | COMMENTS
SARATOGA SPRINGS CITY — 1307 N. COMMERCE DR. #200, SARATOGA SPRINGS, UT 84045 PHONE: 801-766-9793 FAX: 801-766-9794
STANDARD DETAILS — PRESSURIZED IRR — **PI-12A**

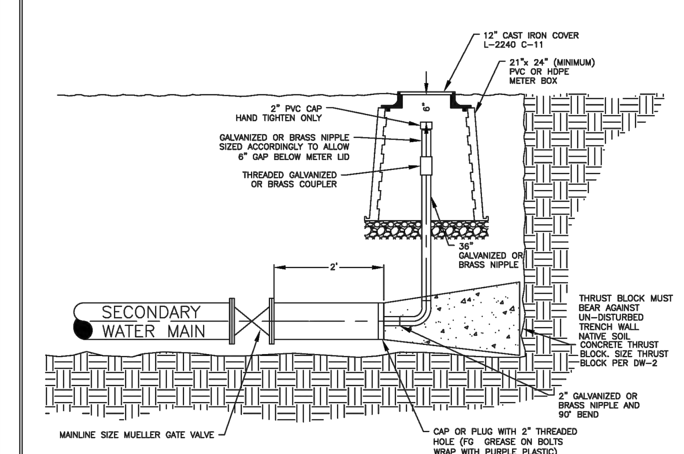

TEMPORARY 2" BLOW-OFF VALVE

DATE: MARCH 2022 | DRAWING NAME: PI-12B | DRAWN BY: JRP | CHECKED: | APPROVED:
REVISIONS: REVISION | DATE | BY | COMMENTS
SARATOGA SPRINGS CITY — 1307 N. COMMERCE DR. #200, SARATOGA SPRINGS, UT 84045 PHONE: 801-766-9793 FAX: 801-766-9794
STANDARD DETAILS — PRESSURIZED IRR — **PI-12B**

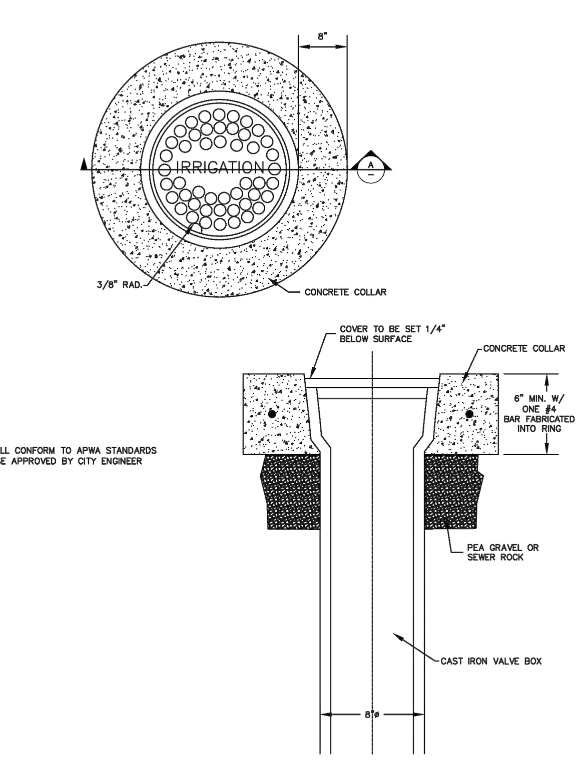

NOTES:
1. ALL WORK SHALL CONFORM TO APWA STANDARDS UNLESS OTHERWISE APPROVED BY CITY ENGINEER

CONCRETE COLLAR FOR WATER VALVES

DATE: AUGUST 2022 | DRAWING NAME: PI-13 | DRAWN BY: JRP | CHECKED: | APPROVED:
REVISIONS: REVISION | DATE | BY | COMMENTS
SARATOGA SPRINGS CITY — 1307 N. COMMERCE DR. #200, SARATOGA SPRINGS, UT 84045 PHONE: 801-766-9793 FAX: 801-766-9794
STANDARD DETAILS — PRESSURIZED IRR — **PI-13**

LEI
- A Utah Corporation -
ENGINEERS
SURVEYORS
PLANNERS
3302 N. Main Street
Spanish Fork, UT 84660
Phone: 801.798.0555
Fax: 801.798.9393
office@lei-eng.com
www.lei-eng.com

STATE OF UTAH — GREGORY D MAGLEBY — No. 189844 — 12/23/2025 — REGISTERED PROFESSIONAL ENGINEER

WILDFLOWER - VILLAGE 9 - PLAT X-3

CITY OF SARATOGA SPRINGS, UTAH COUNTY, UTAH

DETAILS

REVISIONS
1 -
2 -
3 -
4 -
5 -

LEI PROJECT #: 2023-0055
DRAWN BY: BLS/MJV
CHECKED BY: GDM
SCALE: NONE (PRINTED ON 24x36)
DATE: 12/23/2025

SHEET
C-904

CALL BEFORE YOU DIG! IT'S THE LAW — BLUE STAKES 1-800-662-4111

U:\LAND DESKTOP PROJECTS\13-0902 DAI COLLINS BROTHERS\DWG\VILLAGE 9\V9 PLAT X-3\23-0055 X-3 (901-906) DETAILS.DWG 12/5/2025 4:03 PM

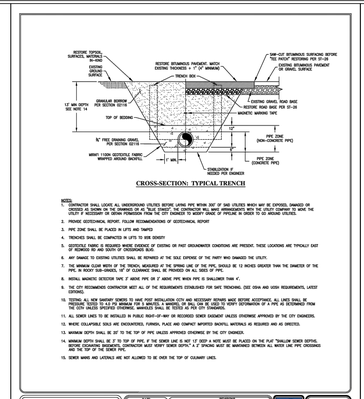

CROSS-SECTION: TYPICAL TRENCH

NOTES:

1. CONTRACTOR SHALL LOCATE ALL UNDERGROUND UTILITIES BEFORE LAYING PIPE WITHIN 300' OF SAID UTILITIES WHICH MAY BE EXPOSED, DAMAGED OR CROSSED AS SHOWN ON THE CONSTRUCTION DRAWINGS OR AS DIRECTED BY THE ENGINEER. CONTACT THE UTILITY COMPANY TO MOVE THE UTILITY IF NECESSARY OR OBTAIN PERMISSION FROM THE UTILITY IF NECESSARY OR OBTAIN PERMISSION FROM THE CITY ENGINEER TO MODIFY GRADE OF PIPELINE IN ORDER TO GO AROUND UTILITIES.
2. PROVIDE GEOTECHNICAL REPORT. FOLLOW RECOMMENDATIONS OF GEOTECHNICAL REPORT
3. PIPE ZONE SHALL BE PLACED IN LIFTS AND TAMPED
4. TRENCHES SHALL BE COMPACTED IN LIFTS TO 95% DENSITY
5. GEOTEXTILE FABRIC IS REQUIRED WHERE EVIDENCE OF EXISTING OR PAST GROUNDWATER CONDITIONS ARE PRESENT. THESE LOCATIONS ARE TYPICALLY EAST OF REDWOOD OR AND SOUTH OF CROSSROADS BLVD.
6. ANY DAMAGE TO EXISTING UTILITIES SHALL BE REPAIRED AT THE SOLE EXPENSE OF THE PARTY WHO DAMAGED THE UTILITY.
7. THE MINIMUM CLEAR WIDTH OF THE TRENCH, MEASURED AT THE SPRING LINE OF THE PIPE, SHOULD BE 12 INCHES GREATER THAN THE DIAMETER OF THE PIPE, IN ROCK OR GRAVEL, 18" OF CLEARANCE SHALL BE PROVIDED ON ALL SIDES OF PIPE.
8. INSTALL MAGNETIC DETECTION TAPE 2' ABOVE PIPE IN TRENCH.
9. THE CITY RECOMMENDS CONTRACTOR MEET ALL OF THE REQUIREMENTS CONSOLIDATED FOR SAFE TRENCHING, (SEE OSHA AND UOSH REQUIREMENTS, LATEST EDITIONS).
10. TESTING: ALL NEW SANITARY SEWERS TO HAVE POST INSTALLATION CCTV AND MEETING REPORT BEFORE ACCEPTANCE. ALL LINES SHALL BE PRESSURE TESTED TO 4.5 PSI MINIMUM FOR 5 MINUTES, A MANDREL OF WALL CAN BE USED TO VERIFY DEFLEMATION OF A PIPE AS DETERMINED FROM THE TCTV CAMERA UNLESS SPECIFIED OTHERWISE. MANHOLES SHALL BE TESTED AS PER CITY STANDARDS.
11. ALL SEWER LINES TO BE INSTALLED IN PUBLIC RIGHT-OF-WAY OR RECORDED SEWER EASEMENT UNLESS OTHERWISE APPROVED BY THE CITY ENGINEERS.
12. WHERE COLLAPSIBLE SOILS ARE ENCOUNTERED, FLOODING, PLACE AND COMPACT IMPORTED BACKFILL MATERIALS AS REQUIRED AND AS DIRECTED.
13. MINIMUM DEPTH SHALL BE 3' TO TOP OF PIPE, IF THE SEWER LINE IS NOT 12' DEEP A NOTE MUST BE PLACED ON THE PLAT "SHALLOW SEWER DEPTHS. BEFORE COMMENCING BACKFILL CONTRACTOR MUST VERIFY SEWER DEPTH". A 2' DEPTH MUST BE MAINTAINED BETWEEN ALL WATER LINE PIPE CROSSINGS AND THE TOP OF THE SEWER PIPE.
14. SEWER MAINS AND LATERALS ARE NOT ALLOWED TO BE DIVE THE TOP OF CULINARY LINES.

SANITARY SEWER PIPE TRENCH | DATE: MAY 2022 | REVISION | DATE | BY | COMMENTS | DRAWING NAME: SS-1 | DRAWN BY: JMP | CHECKED | APPROVED | SARATOGA SPRINGS CITY | STANDARD DETAILS | SANITARY SEWER | **SS-1**

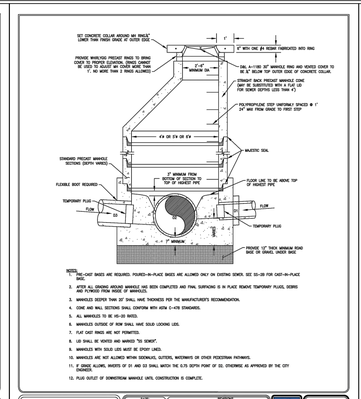

NOTES:

1. PRE-CAST BASES ARE REQUIRED. POURED-IN-PLACE BASES ARE ALLOWED ONLY ON EXISTING SEWER. SEE SS-28 FOR CAST-IN-PLACE BASE.
2. AFTER ALL GROUND AROUND MANHOLE HAS BEEN COMPLETED AND FINAL SURFACING IS IN PLACE REMOVE TEMPORARY PLUGS, DEBRIS AND PUMPED FROM INSIDE OF MANHOLES.
3. MANHOLES DEEPER THAN 20' SHALL HAVE THICKNESS PER THE MANUFACTURER'S RECOMMENDATION.
4. CONE AND WALL SECTIONS SHALL CONFORM WITH ASTM C-478 STANDARDS.
5. ALL MANHOLES TO BE AS-01 BASS.
6. MANHOLES OUTSIDE OF ROW SHALL HAVE SOLID LOCKING LIDS.
7. FLAT CAST RINGS ARE NOT PERMITTED.
8. LID SHALL BE VENTED AND MARKED "TO SEWER".
9. MANHOLES WITH SOLID LIDS MUST BE EPOXY LINED.
10. MANHOLES ARE NOT ALLOWED WITHIN SIDEWALKS, GUTTERS, WATERWAYS OR OTHER PEDESTRIAN PATHWAYS.
11. IF GRADE ALLOWS, INVERTS OF D1 AND D2 SHALL MATCH THE 0.75 DEPTH POINT OF D3. OTHERWISE AS APPROVED BY THE CITY ENGINEER.
12. PLUS OUTLET OF DOWNSTREAM MANHOLE UNTIL CONSTRUCTION IS COMPLETE.

PRE-CAST SANITARY SEWER MANHOLE | DATE: MARCH 28 2022 | REVISION | DATE | BY | COMMENTS | DRAWING NAME: SS-2 | DRAWN BY: JMP | CHECKED | APPROVED | SARATOGA SPRINGS CITY | STANDARD DETAILS | SANITARY SEWER | **SS-2**

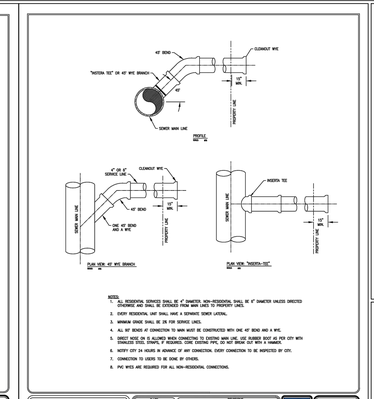

NOTES:

1. ALL RESIDENTIAL SERVICES SHALL BE 4" DIAMETER. NON-RESIDENTIAL SHALL BE 4" DIAMETER UNLESS DIRECTED OTHERWISE AND SHALL BE EXTENDED FROM MAIN LINES TO PROPERTY LINES.
2. EVERY RESIDENTIAL UNIT SHALL HAVE A SEPARATE SEWER LATERAL.
3. MINIMUM GRADE SHALL BE 2% FOR SERVICE LINES.
4. ALL 45° BEND OR CONNECTION TO MAIN MUST BE CONSTRUCTED WITH ONE 45° BEND AND A WYE.
5. DIRECT MUDE ON AS ALLOWED WHEN CONNECTING TO EXISTING MAIN LINE. USE RUBBER BOOT AS PER CITY WITH STAINLESS STEEL STRAPS, IF REQUIRED. CORE EXISTING PIPE, DO NOT BREAK OUT WITH A HAMMER.
6. NOTIFY CITY 24 HOURS IN ADVANCE OF ANY CONNECTION. EVERY CONNECTION TO BE INSPECTED BY CITY.
7. CONNECTION TO USERS TO BE DONE BY OWNER.
8. PVC WYES ARE REQUIRED FOR ALL NON-RESIDENTIAL CONNECTIONS.

SEWER SERVICE CONNECTION | DATE: MAY 2022 | REVISION | DATE | BY | COMMENTS | DRAWING NAME: SS-3 | DRAWN BY: JMP | CHECKED | APPROVED | SARATOGA SPRINGS CITY | STANDARD DETAILS | SANITARY SEWER | **SS-3**

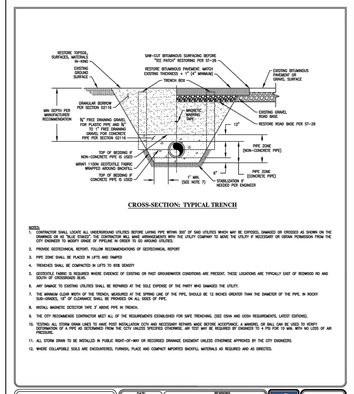

CROSS-SECTION: TYPICAL TRENCH

NOTES:

1. CONTRACTOR SHALL LOCATE ALL UNDERGROUND UTILITIES BEFORE LAYING PIPE WITHIN 300' OF SAID UTILITIES WHICH MAY BE EXPOSED, DAMAGED OR CROSSED AS SHOWN ON THE CONSTRUCTION DRAWINGS OR AS DIRECTED BY THE ENGINEER. CONTACT THE UTILITY COMPANY TO MOVE THE UTILITY IF NECESSARY OR OBTAIN PERMISSION FROM THE CITY ENGINEER TO MODIFY GRADE OF PIPELINE IN ORDER TO GO AROUND UTILITIES.
2. PROVIDE GEOTECHNICAL REPORT. FOLLOW RECOMMENDATIONS OF GEOTECHNICAL REPORT
3. PIPE ZONE SHALL BE PLACED IN LIFTS AND TAMPED
4. TRENCHES SHALL BE COMPACTED IN LIFTS TO 95% DENSITY
5. GEOTEXTILE FABRIC IS REQUIRED WHERE EVIDENCE OF EXISTING OR PAST GROUNDWATER CONDITIONS ARE PRESENT. THESE LOCATIONS ARE TYPICALLY EAST OF REDWOOD OR AND SOUTH OF CROSSROADS BLVD.
6. ANY DAMAGE TO EXISTING UTILITIES SHALL BE REPAIRED AT THE SOLE EXPENSE OF THE PARTY WHO DAMAGED THE UTILITY.
7. THE MINIMUM CLEAR WIDTH OF THE TRENCH, MEASURED AT THE SPRING LINE OF THE PIPE, SHOULD BE 12 INCHES GREATER THAN THE DIAMETER OF THE PIPE, IN ROCK OR GRAVEL, 18" OF CLEARANCE SHALL BE PROVIDED ON ALL SIDES OF PIPE.
8. INSTALL MAGNETIC DETECTION TAPE 2' ABOVE PIPE IN TRENCH.
9. THE CITY RECOMMENDS CONTRACTOR MEET ALL OF THE REQUIREMENTS CONSOLIDATED FOR SAFE TRENCHING, (SEE OSHA AND UOSH REQUIREMENTS, LATEST EDITIONS).
10. TESTING: ALL STORM DRAIN LINES TO HAVE POST INSTALLATION CCTV AND MEETING REPORT BEFORE ACCEPTANCE. A MANDREL SHALL BE USED TO VERIFY DEFLEMATION OF A PIPE AS DETERMINED FROM THE CCTV UNLESS SPECIFIED OTHERWISE. ANY FOUND MAY BE REQUIRED BY ENGINEER TO PIPE FOR TO MAN. NO LOSS OF AIR PRESSURE.
11. ALL STORM DRAIN TO BE INSTALLED IN PUBLIC RIGHT-OF-WAY OR RECORDED DRAINAGE EASEMENT UNLESS OTHERWISE APPROVED BY THE CITY ENGINEERS.
12. WHERE COLLAPSIBLE SOILS ARE ENCOUNTERED, FLOODING, PLACE AND COMPACT IMPORTED BACKFILL MATERIALS AS REQUIRED AND AS DIRECTED.

STORM DRAIN PIPE TRENCH | DATE: MAY 2022 | REVISION | DATE | BY | COMMENTS | DRAWING NAME: SD-1 | DRAWN BY: JMP | CHECKED | APPROVED | SARATOGA SPRINGS CITY | STANDARD DETAILS | STORM DRAIN | **SD-1**

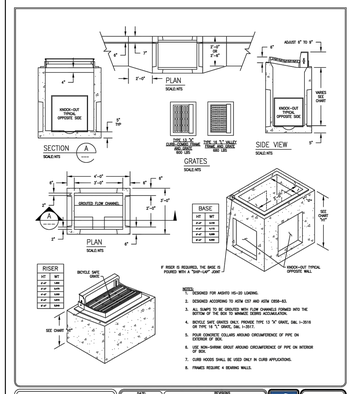

NOTES:

1. DESIGNED FOR AASHTO HS-20 LOADING.
2. DESIGNED ACCORDING TO ASTM C57 AND ASTM C858-83.
3. ALL BEARS TO BE GROUTED INTO FLOW CHANNELS CONVEX INTO THE BOTTOM OF THE BOX TO MINIMIZE DEBRIS ACCUMULATION.
4. BOTTOM, WITH CHANNEL FLOW, PROVIDE TYPE 13 "C" GRATE, DAL 1-3016 OR TYPE 13 "C" GRATE, DAL 1-3017.
5. POUR CONCRETE COLLARS AROUND CIRCUMFERENCE OF PIPE ON EXTERIOR OF BOX.
6. USE NON-SHRINK GROUT AROUND CIRCUMFERENCE OF PIPE ON INTERIOR OF BOX.
7. CURB HOODS SHALL BE USED ONLY IN CURB APPLICATIONS.
8. FRAMES REQUIRE 4 BEARING WALLS.

GUTTER INLET BOX | DATE: MAY 2022 | REVISION | DATE | BY | COMMENTS | DRAWING NAME: SD-2 | DRAWN BY: JMP | CHECKED | APPROVED | SARATOGA SPRINGS CITY | STANDARD DETAILS | STORM DRAIN | **SD-2**

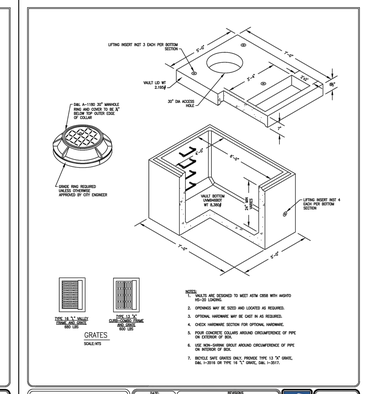

NOTES:

1. INVERTS ARE DESIGNED TO MEET ASTM C858 WITH AASHTO HS-20 LOADING.
2. OPENINGS MAY BE SIZED AND LOCATED AS REQUIRED.
3. OPTIONAL HARDWARE MAY BE CAST IN AS REQUIRED.
4. CHECK HARDWARE SECTION FOR OPTIONAL HARDWARE.
5. POUR CONCRETE COLLARS AROUND CIRCUMFERENCE OF PIPE ON EXTERIOR OF BOX.
6. USE NON-SHRINK GROUT AROUND CIRCUMFERENCE OF PIPE ON INTERIOR OF BOX.
7. BICYCLE SAFE GRATES ONLY. PROVIDE TYPE 13 "C" GRATE, DAL 1-3016 OR TYPE 13 "C" GRATE, DAL 1-3017.

COMBINATION BOX | DATE: MAY 2022 | REVISION | DATE | BY | COMMENTS | DRAWING NAME: SD-5 | DRAWN BY: JMP | CHECKED | APPROVED | SARATOGA SPRINGS CITY | STANDARD DETAILS | STORM DRAIN | **SD-5**

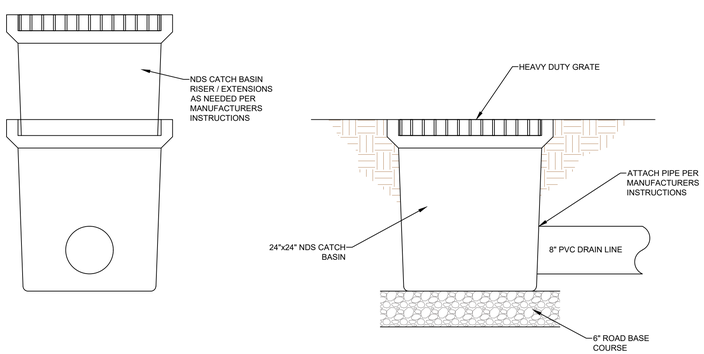

1 | **2'x2' YARD DRAIN DETAIL (PRIVATELY MAINTAINED)**

LEI
- A Utah Corporation -
ENGINEERS
SURVEYORS
PLANNERS
3302 N. Main Street
Spanish Fork, UT 84660
Phone: 801.798.0555
Fax: 801.798.9393
office@lei-eng.com
www.lei-eng.com

STATE OF UTAH
GREGORY D. MAGLEBY
No. 189844
REGISTERED
PROFESSIONAL ENGINEER

WILDFLOWER - VILLAGE 9 - PLAT X-3

CITY OF SARATOGA SPRINGS, UTAH COUNTY, UTAH

DETAILS

REVISIONS
1 -
2 -
3 -
4 -
5 -

LEI PROJECT #: 2023-0055
DRAWN BY: BLS/MJV
CHECKED BY: GDM
SCALE: NONE (PRINTED ON 24x36)
DATE: 12/23/2025

SHEET
C-905

CALL BEFORE YOU DIG! IT'S THE LAW BLUE STAKES 1-800-662-4111

U:\LAND DESKTOP PROJECTS\13-0062 DM COLLINS BROTHERS\WOVILLAGE 9\9 PLAT X-3\23-0055 X-3 (09)-900(DETAILS).DWG 12/23/2025 4:03 PM